IN THE

Supreme Court of the United States

October Term, 1948.

No. 372

LeRoy J. Leishman,

Petitioner,

vs.

Radio Condenser Company and General Instrument Corporation,

Respondents.

PETITION FOR WRIT OF CERTIORARI AND BRIEF IN SUPPORT THEREOF.

LeRoy J. Leishman,
2921 Greenfield Avenue, Los Angeles 34,
Petitioner in Propria Persona.

Parker & Company, Law Printers, Los Angeles. Phone TR. 8626.

SUBJECT INDEX

TABLE OF AUTHORITIES CITED

Cases

Statutes

IN THE

Supreme Court of the United States

OCTOBER TERM, 1948.

No. .....

LEROY J. LEISHMAN,

Petitioner,

vs.

RADIO CONDENSER COMPANY and GENERAL INSTRUMENT CORPORATION,

Respondents.

PETITION FOR WRIT OF CERTIORARI.

To the Honorable Supreme Court of the United States:

Your petitioner respectfully shows:

Summary Statement of Matter Involved.

Radio Condenser Company and General Instrument Corporation, respondents herein, brought this suit under the Declaratory Judgment Act in the United States District Court for the Southern District of California, against petitioner, a resident within the said district and the owner of U. S. patent No. 20,827 [R. Vol. II, pp. 168 *et seq.*].

Respondents alleged that petitioner had filed a suit against The Richards and Conover Company, Civil Action No. 2155, in the U. S. District Court for the Western

District of Oklahoma alleging that the said company had infringed claims 7 to 11 of his patent No. 20,827 through the sale of Motorola radio receiving sets containing automatic tuning devices embodying the invention covered by the said claims.

Respondents further alleged among other things that they were the manufacturers of the said automatic tuning devices; that the said claims of petitioner's patent were invalid; and that the said automatic tuning devices did not infringe the said claims [R. Vol. I, pp. 2 *et seq.*].

Petitioner's answer denied that the said claims were invalid and that they were not infringed by respondents' tuners [R. Vol. I, pp. 15 *et seq.*] and a counter claim was filed praying for damages and an injunction [R. Vol. I, pp. 16 *et seq.*].

Subsequently, on January 23, 1946, respondents moved for summary judgment of non-infringement [R. Vol. I, pp. 27 *et seq.*] on the ground that their automatic tuners were the same patentwise as the tuners which the Ninth Circuit Court of Appeals held did not infringe the said claims in *Leishman v. Associated Wholesale Electric Company,* 137 F. 2d 722. The *Associated* decision, upon which respondents thus relied, held that the accused tuners, which were operated by plungers instead of levers as shown in the patent, did not infringe because the plungers were not equivalents of the levers. None of the claims at issue called for levers, but the appellate court in the *Associated* case ruled that the claims of the reissue patent were not for the same invention as the original patent unless they included levers. The court explained in footnote 12 that this conception of the original patent was arrived at by omitting original claim 5, which did not include

levers, the court saying that "both the original and reissue patents must be construed as if claim 5 had never been included in either," because this broad claim had been disclaimed *from the reissue*. The court accordingly considered whether plungers and levers were equivalents for operating the tuners, but ruled that they were not.

The record in the *Associated* case was silent as to whether plungers and levers were known equivalents for operating automatic tuners. It did not include any prior art tuner patents that were operated by plungers. In the three prior art tuner patents that were of record, the illustrative embodiment showed levers as the operating members.

Petitioner opposed the motion for summary judgment, supporting his affidavit with ten patents and sixteen sets of pictures showing that plungers and levers were well known equivalents for operating automatic tuners and other widely used mechanisms at the time of the grant of the original patent of which the patent in suit is a reissue.

Petitioner's affidavit stated that none of this evidence of the equivalency of levers and plungers was presented in evidence in the *Associated* case [R. Vol. I, p. 48], and the motion was opposed on the ground that the decision in the *Associated* case could therefore not be followed in the present case because the evidence was different and showed the previous decision to be in error.

On June 10, 1946, the U. S. District Court for the Western District of Oklahoma, after a full trial, entered judgment in petitioner's favor in *The Richards and Con-*

over case, *supra,* to the effect that the same claims here at issue are good and valid in law and that the defendant in the Oklahoma case had infringed them through the sale of Motorola sets containing the accused tuners [R. Vol. I, pp. 60 *et seq.*]. Finding 26 in the Oklahoma case identified these tuners as the products of the respondents in the instant action [R. Vol. I, p. 59], and Finding 27 stated that "the tuners referred to in Finding 26 do not differ in any essential respect, so far as the question of infringement is concerned, from the tuner" which was the accused device in the *Associated* case, *supra* [R. Vol. I, p. 59].

Petitioner filed a motion for permission to amend his answer in the instant case [R. Vol. I, pp. 72 *et seq.*] to make the additional defense that respondents were bound by the judgment in the Oklahoma case because of their participation therein, but the court denied the motion [R. Vol. I, p. 134].

On September 12, 1946, the District Court in the instant case entered *summary* judgment holding that the claims here at issue were *not* infringed by respondents' automatic tuners, the said *summary* judgment being in direct conflict with the prior judgment of the U. S. District Court for the Western District of Oklahoma, which held after a full trial that the same tuners were clear infringements [R. Vol. I, pp. 94 *et seq.*].

On May 4, 1948, the Court of Appeals for the Ninth Circuit affirmed the summary judgment of the lower court

[R. Vol. III, pp. 258 *et seq.*], and on June 3, 1948, it denied a petition for a rehearing [R. Vol. III, p. 268].

The decision of the court of appeals modified the injunction of the lower court so that petitioner is now enjoined from enforcing the Oklahoma judgment against Galvin Manufacturing Company which assumed the defense of the Oklahoma action and manufactured the radio sets embodying the tuners involved in that suit.

On August 14, 1948, the Hon. William O. Douglas, Associate Justice of this Honorable Court, extended the time for filing this petition for a writ of certiorari up to and including October 30, 1948 [R. Vol. III, p. 273].

The defendant in the Oklahoma case appealed from the judgment of the lower court, and a hearing was held before the Court of Appeals for the Tenth Circuit on September 13, 1948.

The Supreme Court Has Jurisdiction to Review the Decision of the Court of Appeals for the Ninth Circuit.

Petitioner relies upon Section 240 of the Judicial Code, corresponding to Title 28, U. S. C. A., paragraph 1254, and also Rule 38(5b) of the Rules of the Supreme Court. If the Court of Appeals for the Tenth Circuit affirms the decision of the U. S. District Court for the Western District of Oklahoma in the case of *Leishman v. The Richards and Conover Company*, Appeal No. 3577, there will be a direct conflict between two Courts of Appeals as to

whether respondents' automatic tuners infringe claims 7 to 11 of petitioner's patent No. Re 20,827. In that event, Rule 38(5b) of this Honorable Court will be applicable, and this Honorable Court should resolve the conflict.

Although judgment was entered in the Oklahoma case before the summary judgment was entered in the instant action, delays in printing caused the hearing before the Tenth Court of Appeals to be held after the Ninth Court of Appeals had rendered its opinion herein. Even though the time for filing this petition was extended for the maximum permissible period, it nevertheless has become necessary to file this petition before the Tenth Court of Appeals has acted in the earlier case. This Honorable Court will be immediately advised of the action of the Court of Appeals for the Tenth Circuit. Upon investigation, it appears the Court of Appeals for the Tenth Circuit usually renders decisions in about two months after submission; thus a decision from that Court may be expected about November 13, 1948. The present conflict is thus between a Court of Appeals and a district court in another circuit. It is therefore requested that this Honorable Court defer action on this petition until the Court of Appeals of the Tenth Circuit has rendered its opinion, or, perferably, that this petition be granted without regard to any action of the Tenth Court of Appeals because of the nature of the questions presented which bring this case within the provisions of Rule 38(5b) irrespective of a conflict between circuits.

The Questions Presented.

1. Can infringement of the claims at issue be avoided by using a plunger instead of a lever to operate or transmit motion to the elements within the radio set that do the actual work of petitioner's combination?

2. Is it proper for a federal court to grant a *summary* judgment in direct conflict on identical issues with the judgment of another federal court rendered after a full trial?

3. Is it proper for a federal court to grant a *summary* judgment solely upon the basis of *stare decisis* instead of allowing the opposing party the opportunity of adducing evidence at a trial to show that the previous decision may have been in error?

4. When the patentee (the petitioner here) had already succeeded in an infringement suit in the U. S. District Court for the Western District of Oklahoma where the defense was undertaken by Galvin Manufacturing Company, a privy of the adjudged infringer, was it proper for the Court of Appeals of the Ninth Circuit to enjoin petitioner from enforcing the Oklahoma judgment against Galvin Manufacturing Company, basing such enjoinder solely on the fact that Galvin Manufacturing Company was a customer of petitioner's opponent who prevailed before the Court of Appeals of the Ninth Circuit in this later case?

5. When determining whether the reissued patent was granted for the same invention intended to have been covered by the surrendered original patent, should the original specification and claims have been construed as they appeared, at the time the original patent was sur-

rendered, or was it proper for the appellate court to ignore in original claim 5 the evidence of intent to cover the subject matter of certain *narrow* reissue claims, basing its action solely on the fact that this broad original claim was later disclaimed from the reissue?

6. Was it proper for the Court of Appeals for the Ninth Circuit to affirm the lower court in its denial of petitioner's motion to amend his answer to the complaint in order to make the additional defense that respondents were bound by the judgment in the Oklahoma case because of their participation therein?

Reasons Relied Upon for Allowance of the Writ.

1. The opinion of the Court of Appeals for the Ninth Circuit in the instant case is in conflict with that of the U. S. District Court for the Western District of Oklahoma in the case of *Leishman v. The Richards and Conover Company,* in which an appeal was recently heard by the Court of Appeals for the Tenth Circuit. If the district court's decision is affirmed (a decision is expected within a month) there will be a direct conflict between the decisions of the Courts of Appeals for the Ninth and Tenth Circuits.

2. The Declaratory Judgment Act has made it possible for manufacturers of automatic tuning devices to file declaratory judgment suits against petitioner in the Ninth Circuit, of which he is a resident, in order to secure the benefit of the decision of the Court of Appeals for the Ninth Circuit in the case of *Leishman v. Associated Wholesale Electric Company, supra,* thus making it difficult, if not impossible, for petitioner ever to obtain a second independent adjudication in another circuit. In

addition to Radio Condenser Company and General Instrument Corporation, respondents herein, General Motors Corporation has also brought a declaratory judgment suit against petitioner in the Ninth Circuit. The latter case has been tried but not yet decided. Respondents herein are the sole present manufacturers, not licensed by petitioner, of automatic tuners of the type here involved for resale as components to manufacturers of household radio receivers, and General Motors Corporation is the leading manufacturer of such tuners for automobile use. More than eight million of these tuners have already been made [Oklahoma Finding 25, Vol. I, p. 59]. A decision by this court in the instant case will thus determine these issues for all these important litigants, and this Honorable Court should therefore decide the questions here presented regardless of the outcome of the appeal now before the Court of Appeals for the Tenth Circuit. The radio industry should know where it stands with respect to the patent here involved.

3. The summary judgment herein, which has been affirmed by the Court of Appeals for the Ninth Circuit, is the first summary judgment that has ever been granted in direct conflict with the judgment of another federal court rendered after a full trial. This use of a summary judgment is contrary to the practice insisted upon by the Supreme Court and other federal courts, which have held that a summary judgment should never be granted when there is the least doubt as to what the outcome would be if a trial were held. Such use of summary judgments is a departure from the accepted and usual course of judicial proceedings.

4. The basing of a summary judgment upon the doctrine of *stare decisis,* especially when the action is filed

under the Declaratory Judgment Act, creates a situation in which infringers may rush into a patentee's circuit, after a decision has once been rendered against him, and secure rubber stamped summary judgments on the basis of *stare decisis* without the patentee ever having an opportunity to adduce evidence at a trial to show that the original decision may have been in error. This use of summary judgment is a radical and unwarranted departure from the accepted and usual course of judicial procedure.

5. In its *Associated* decision, *supra*, reaffirmed and adopted by the appellate court in its opinion in the present case, the court decided an important question of patent law in respect to reissue patents in a way that is contrary to established procedure and in conflict with the aforementioned decision of the district court in the Tenth Circuit and with the pertinent statutes themselves.

Prior to its *Associated* decision, relied upon by the appellate court in the instant case, it was recognized that reissue claims were for the same invention as the original patent, if such reissue claims came within the scope of the original claims. When a broad original claim was dropped at the time of reissue because it included too much, this did not affect the validity of narrower reissue claims. The *Associated* decision is to the effect that if the broad claim is dropped subsequent to the reissue by means of a disclaimer, then the validity of the narrower reissue claims is retroactively affected for the reason that the court may not examine the broad claim for evidence

of intent, but must construe the original patent as if it had never included the disclaimed claim. Heretofore, the effect of a disclaimer of a broad claim has only been to relinquish that portion of its scope which was in excess of the narrower claims retained. That is what the disclaimer statute provides;[1] but the *Associated* decision, reaffirmed in the instant case, makes an unauthorized and unwarranted exception to the application of both the disclaimer and the reissue statute[2] that can have far-reaching and retroactive consequences.

In petitioner's situation, dealt with in the *Associated* decision, broad original claim 5 was drawn to the essential elements of petitioner's combination and did not include any kind of an operating member whatever, it being immaterial whether the parts were operated by a lever or a plunger or some other convenient means. This broad claim was repeated in the reissue patent where the narrower claims here at issue appeared for the first time. Seventeen months after the reissue was granted it was discovered that claim 5 was broad enough to cover other

---

[1]"Whenever, through inadvertence, accident, or mistake, and without any fraudulent or deceptive intention, a patentee has claimed more than that of which he was the original or first inventor or discoverer, *his patent shall be valid for all that part which is truly and justly his own, provided the same is a material or substantial part of the thing patented;* . . ." (Emphasis added.) Rev. Stat., Sec. 4917. (U. S. C., Title 35, Sec. 65.)

[2]"* * * Every patent so reissued, together with the corrected specifications, shall have the same effect and operation in law, on the trial of all actions for causes thereafter arising, as if the same had been originally filed in such corrected form; . . ." Rev. Stat., Title LX, Sec. 4916. (U. S. C., Title 35, Sec. 64.)

subject matter to which the patentee was probably not entitled. Claim 5 was accordingly disclaimed; but the narrower leverless claims, which included important structural features that were novel with the patentee, were all retained. Had claim 5 been dropped when the reissue was obtained, established federal procedure would have required that it be taken into consideration by the appellate court when examining the original patent to determine whether the reissue claims were for the same invention intended to have been claimed by the original; but because this claim was dropped by a subsequent disclaimer, the appellate court refused to consider the claim when ascertaining the patentee's original intent, saying the disclaimer "speaks from the date of the original patent." As authority for this statement, the *Associated* decision referred to footnote 7, which cited this Honorable Court's decision in *Altoona Publix Theatres v. American Tri-Ergon Corp.*, 294 U. S. 477, 491.

This Court's decision in the *Altoona* case had nothing whatever to do with reissues, and the appellate court embarks on a dangerous course when it stretches the quoted statement to mean that when a broad original claim is disclaimed from a reissue patent, the original patent must thereafter be construed as if no part of the subject matter of the broad claim was ever intended to have been covered.

Original claim 5, for the reason that it did not include any kind of an operating member whatever, thus constituted indisputable evidence in the original patent that the

patentee did not regard the operating member as one of the essential elements of his invention and that he did not consider himself limited to the particular type of operating member shown in the lever-operated embodiment illustrated in the patent. Explaining that it was dating the disclaimer back to the original patent and ignoring claim 5, the appellate court said in the *Associated* decision that the reissue claims must include levers in order to be for the same invention as the original patent.

The Oklahoma court did not go along with the Court of Appeals for the Ninth Circuit in its reasoning that the reissue claims are not for the same invention as the original patent unless they include levers. Finding 7 of the Oklahoma court [R. Vol. I, p. 54] was as follows:

> "7. The reissue patent No. 20,827, and especially claims 7, 8, 9, 10 and 11 thereof, are for the same invention as patent 2,108,538; and it appears, from the face of the said patent 2,108,538, that plaintiff intended to claim the invention now claimed by claims 7, 8, 9, 10 and 11 in the reissue patent No. 20,827."

There is thus a conflict on this point between the Court of Appeals for the Ninth Circuit and the District Court within the Tenth Circuit. Regardless of whether or not the judgment of the latter court is affirmed, this important point of patent law should be passed on by this Honorable Court because of its departure from established doctrine and the statutes and because of the far-reaching effects that it may have.

If the disclaimer of a broad claim from a reissue patent is to be made retroactive to the original patent as to all of its subject matter, which is the effect of the *Associated* decision reaffirmed here, then any patent that has been reissued to secure narrower claims can at any later time be converted into an invalid reissue merely by disclaiming one of the broad claims that was held over from the original. If this is to be the law of the land, the validity of a reissue can never be finally determined, and the decision of the Commissioner of Patents or of any court including the Supreme Court can be upset at any subsequent time merely by the disclaiming by the patentee of a broad reissue claim that had appeared in the original patent.

Many courts require that a patentee disclaim a broad claim if it is found to include more than he had a right to claim, but the Ninth Circuit ruling is to the effect that if such a claim is in a reissue patent, the disclaimer, in construing the patentee's original intent, must date back to the original patent, thereby creating a situation in which the remaining reissue claims are no longer for the same invention as the original unless they are restricted to the exact structure set forth in the original claims that were not involved in the disclaimer.

There are thus at least five reasons why this Honorable Court should grant this petition. Four of these reasons are of such a nature that the petition should be granted irrespective of whether the judgment of the United States District Court for the Western District of Oklahoma is affirmed by the Court of Appeals for the Tenth Circuit.

Prayer for the Issuance of the Writ.

Wherefore, your petitioner prays that a writ of certiorari issue under the seal of this Court, directed to the Court of Appeals for the Ninth Circuit, commanding said court to certify and send to this Court a full and complete transcript of the record of the proceedings of the said court had in the case numbered and entitled Docket No. 11652, LeRoy J. Leishman, appellant, v. Radio Condenser Company and General Instrument Corporation, appellees, to the end that this cause may be reviewed and determined by this Court as provided by the statutes of the United States; and that the judgment herein of said Court of Appeals for the Ninth Circuit be reversed by the court, and for such other relief as to this Court may seem proper.

Dated this 26th day of October, 1948.

LeRoy J. Leishman,
Petitioner, in Propria Persona.

Certificate.

This petition is in my judgment well founded, and is not interposed for delay.

LeRoy J. Leishman,
Petitioner, in Propria Persona.

IN THE

Supreme Court of the United States

OCTOBER TERM, 1948.

No. .....

LEROY LEISHMAN,

Petitioner,

vs.

RADIO CONDENSER COMPANY and GENERAL INSTRUMENT CORPORATION,

Respondents.

BRIEF IN SUPPORT OF PETITION.

I.

PUBLICATION OF OPINIONS OF LOWER COURTS.

The opinion in the District Court was an unreported memorandum opinion, but the findings of fact may be found in Vol. I of the record, beginning on page 86.

The opinion in the Court of Appeals for the Ninth Circuit [R. Vol. III, pp. 285 *et seq.*] is reported in 167 F. 2d 890.

II.
BASIS OF JURISDICTION.

The judgment was rendered on a motion for summary judgment in an action brought under the Declaratory Judgment Act [Sec. 274-D of the Judicial Code, 28 U. S. C., Paragraph 40 (before the recent revisions)] and patent statutes of the United States.

Jurisdiction of this Court is invoked under Section 240 of the Judicial Code, corresponding to Title 28, U. S. C. A., Paragraph 1254; and also under Rule 38(5b) of the Rules of the Supreme Court.

III.
STATEMENT OF THE CASE.

Petitioner seeks a review of the decision of the Court of Appeals for the Ninth Circuit affirming a summary judgment of the District Court to the effect that respondents' devices do not infringe claims 7 to 11 of petitioner's reissue patent No. Re. 20,827.

The summary judgment of the lower court was based upon the doctrine of *stare decisis,* following the appellate court's ruling in the case of *Leishman v. Associated Wholesale Electric Company,* 137 F. 2d 722.

In affirming the lower court's judgment, the appellate court affirmed and adopted its earlier decision [R. Vol. III, p. 263].

In the *Associated* case, the lower court decided only that the claims were invalid for want of invention. It rendered no opinion on the issue of infringement and made no findings that were pertinent to infringement (36 Fed. Supp. 804). The Court of Appeals wiped out the holding that the claims were invalid for want of invention, but decided

de novo the issue of infringement without any findings from the lower court on this issue. Such judicial procedure, according to the Court of Appeals for the Sixth Circuit, violates both the letter and spirit of Rule 52.[8]

In the instant case, the only finding that supported the lower court's *summary* judgment of non-infringement, was finding 18, which read as follows [R. Vol. I, p. 91]:

> "18. No evidence has been presented to the court by defendant which could in any manner change or affect the ruling of the Circuit Court of Appeals in the aforesaid [Associated] case that plungers and levers in the alleged patented combination do not function in the same way, or in substantially the same way, and are therefore not equivalents."

Without allowing petitioner the opportunity of adducing evidence at a trial to prove that the *Associated* decision was in error, the lower court merely followed the *Associated* decision of non-infringement which was rendered without any findings of fact. In the instant case, the lower court thus made no findings on the merits of this issue, but merely a finding that there was no evidence in

---

[8]"The record discloses, however, that no opinion was expressed, no findings of fact were filed, and no conclusions of law were stated by the District Court with respect to the validity of the patent claims in issue. Nevertheless, the appellant urges that this court should pass upon the validity of the claims of the MacDonald patents. We cannot agree that such procedure would be appropriate.

* * * * * * * *

"* * * Without findings of fact from the trial court, the reviewing court would, in our judgment, violate both the letter and spirit of Rule 52 in passing upon a controverted issue of fact [in the instant case the validity of a patent] not determined in the trial court." *Hazeltine Corporation v. Crosley Corporation*, C. C. A. 6, 130 F. 2d 344, at 349.

the summary judgment proceedings that would in its judgment change the opinion of the appellate court in the former case.

The Court of Appeals has now affirmed the lower court's judgment. Inasmuch as the appellate court's opinion is a mere affirmance of the *Associated* opinion, we thus have a *second* decision arrived at without any findings of fact on the merits of the infringement issue. The decision is to the effect that the first opinion, arrived at without findings, was correct, and that petitioner may not be given a trial to contest the soundness of the first abortive opinion.

The United States District Court for the Western District of Oklahoma, in rendering judgment in petitioner's favor on June 10, 1946, made complete findings, of which findings 6, 11, 12, 17, 26 and 27 were directed to the issue of infringement [R. Vol. I, pp. 55 *et seq.*].

Petitioner moved to amend the pleading [Vol. I, pp. 72 *et seq.*] in order to make the additional defense that respondents herein were bound by the Oklahoma judgment because of their participation in the defense of that action, but his motion was denied [R. Vol. I, p. 134].

The summary judgment herein was entered on September 12, 1946 [R. Vol. I, pp. 94 *et seq.*]. It was thus rendered in direct conflict with the judgment of the Oklahoma court which arrived at its findings after a full trial.

The Oklahoma action was defended by the Galvin Manufacturing Company, makers of the radio sets that included the accused tuners manufactured by respondents herein. Finding 3 of the Oklahoma court [R. Vol. I, p. 53] was to the effect that the Galvin Manufacturing Company was bound by the judgment.

The lower court in the instant action enjoined petitioner from any litigation involving respondents' customers [R. Vol. I, pp. 98 *et seq.*], but the injunction was modified to permit petitioner to defend the appeal from the Oklahoma judgment and to permit him to proceed against the Oklahoma defendant's privy, the Galvin Manufacturing Company.

The Court of Appeals for the Ninth Circuit modified the judgment by removing petitioner's right to proceed against the Galvin Manufacturing Company [R. Vol. I, p. 266].

On the issues of the case, the major conflict between the courts in the Ninth and Tenth Circuits is whether infringement of petitioner's claims may be avoided by using a plunger instead of a lever to operate or transmit motion to the elements within the radio set that do the actual work of petitioner's combination. The ruling of the Court of Appeals for the Ninth Circuit on this point will be found at the close of its controlling opinion in the *Associated* case, *supra,* and the contrary view of the Oklahoma court is expressed in findings 6, 11, 12 and 16 [R. Vol. I, pp. 53, 55, 56].

One of the subsidiary questions enumerated in the petition has to do with whether the disclaimer of a broad claim from a reissue patent which also appeared in the original patent, can retroactively change the surrendered original patent and thereby create a situation in which the regularly granted *reissue* patent is no longer for the same invention as the original.

The reissue patent here at issue added six new claims, of which claims 7 to 11 were involved in the Oklahoma and California cases. Like claim 5 of the original patent, which was retained in the reissue, reissue claims 7 and 8 did not include any kind of an operating member as one of its elements, and claims 9, 10 and 11 claimed the operating member broadly as a "manually operable member" or "manually operable means." Seventeen months after the reissue was granted, claim 5 was disclaimed because it was broad enough to read on devices not invented by petitioner, but the narrower claims were retained because they included novel and patentable structure.

Ordinarily, the disclaimer of a broad claim does not affect the patentably different narrower claims, and the result of the disclaimer is merely to relinquish the patentee's right to that part of the scope of the broad claim which is in excess of the narrower claims retained. But claim 5 happened to be the only claim in the original patent that did not include a lever, and the Court of Appeals for the Ninth Circuit held that since this Honorable Court had said the disclaimer speaks from the date of the original patent, claim 5 could not be considered when examining the original patent to see if the patentee originally intended to cover a combination not restricted to lever operation. The far-reaching effect of this ruling was mentioned in the petition under Reasons Relied Upon for Allowance of the Writ, and it will be further discussed in the Argument.

IV.

SPECIFICATION OF ERRORS.

1. The Court of Appeals for the Ninth Circuit erred in holding that respondents' tuners do not infringe claims 7 to 11 of patent No. Re. 20,827.

2. The Court of Appeals for the Ninth Circuit erred in holding that a plunger is not the equivalent of a lever in the operation of the combinations set forth in the claims here at issue.

3. The Court of Appeals for the Ninth Circuit erred in affirming a summary judgment granted in direct conflict with the judgment of another federal court rendered after a full trial.

4. The Court of Appeals for the Ninth Circuit erred in affirming a summary judgment based solely upon the doctrine of *stare decisis*.

5. The Court of Appeals for the Ninth Circuit erred in failing to consider claim 5 of the original patent when examining the said patent to determine whether the reissue was granted for the same invention as that intended to have been claimed in the original.

6. The Court of Appeals for the Ninth Circuit erred in holding that the reissue claims are not for the same invention as the original claims unless they include levers.

7. The Court of Appeals for the Ninth Circuit erred in misapplying a ruling of this Honorable Court in *Altoona Publix Theatres v. American Tri-Ergon Corp.* to form a basis for its unprecedented opinion that an original claim which has been disclaimed from the reissue must be ignored when considering the intent of a patentee to cover the combinations covered by the remaining reissue claims.

8. The Court of Appeals for the Ninth Circuit erred in modifying the injunction of the lower court so that petitioner is no longer permitted to proceed against the privy of the defendant in the Oklahoma action which was decided in petitioner's favor.

9. The Court of Appeals for the Ninth Circuit erred in affirming the lower court in its denial of petitioner's motion for permission to file a supplemental answer alleging that respondents were bound by the Oklahoma judgment because of their participation in the defense of that action.

V.
ARGUMENT.

A. This Honorable Court Should Resolve the Conflict on the Issue of Infringement.

Rule 38(5b) of this Honorable Court provides that the court will resolve a conflict between the courts of appeal of different circuits in patent cases. That practice has been followed too often to require a citation of the cases in which a writ of certiorari was issued for this purpose.

At present the conflict is between the Court of Appeals for the Ninth Circuit and the United States District Court for the Western District of Oklahoma, but it is expected that the Court of Appeals for the Tenth Circuit will render its opinion on the appeal from the Oklahoma case within a month. If the decision is affirmed, the conflict will be between the appellate courts.

Irrespective of any action by the Court of Appeals for the Tenth Circuit, the nature of the holding of non-infringement in the Ninth Circuit is such that certiorari should be granted to avoid the serious consequences of a

radical departure from this Honorable Court's rulings that infringement of a patented combination cannot be avoided by substituting a well known mechanical equivalent for one of the elements of the combination.

The doctrine with respect to equivalents was settled long ago in the Supreme Court case of *Seymour v. Osborne,* 11 Wall. (78 U. S.) 516 at 556, 20 L. Ed. 33 at 42, wherein the court said:

> ". . . Mere formal alterations in a combination in letters patent, however, are no defense to the charge of infringement, and the withdrawal of one ingredient from the same and the substitution of another which was well known at the date of the patent as a proper substitute for the one withdrawn, is a mere formal alteration of the combination if the ingredient substituted performs substantially the same function as the one withdrawn."

In the instant case, the function of the lever and the function of the plunger are not merely *substantially* the same; they are *identical.* The function in both cases is to move an adjustable *tappet* member referred to in the claims as an "adjustably mounted positioning element" or "means adjustably movable about a pivot." And plungers were not only "well known at the date of the patent as a proper substitute" for a lever, but these mechanical devices were, and still are, the most commonly encountered of all mechanical equivalents.

An abundance of evidence of the well known equivalency of levers and plungers was presented with the Affidavit of LeRoy J. Leishman Filed in Behalf of Defendant [R. Vol. I, p. 46], but their equivalency is so well known

that this Court may readily take judicial notice of the fact without even referring to the record. Cash registers are operated either by plungers (push buttons) or by levers. Trumpet and trombone players play their instruments by pressing on plungers, while the clarinet and saxaphone players are operating short levers. Bicycle pumps are operated by plungers, but the family water pump on the farm was operated by a long lever, or handle. The usual pay telephone is switched out of circuit at the close of the conversation by hanging the receiver on the end of a lever, while a desk set is switched out of circuit by placing the receiver on the plunger or plungers in the cradle where the receiver rests when the instrument is not in use. Such examples could be multiplied indefinitely.

Vol. II of the record contains copies of ten patents on plunger-operated devices in this art that were known when the patent office granted the original patent that was reissued as the patent here in suit. One of these patents shows the *alternative* use of a plunger and a lever for operating a tappet in an electric clock in 1883 [Kettell, R. Vol. II, pp. 178 *et seq.*], and two of them illustrate the *optional* use of plungers or levers in automatic tuners before petitioner's original patent was granted [Danish patent, R. Vol. II, p. 255; and Peck, R. Vol. II, pp. 238 *et seq.*, Figs. 2 to 5]. In Peck's 1932 tuner, the operating member is attached at a pivot 20, and he says [p. 242, lines 69-71]. "Various expedients may be adapted to cause the downward movement of the pivot 20." Peck illustrates manually operated *levers* in Figs. 3, 4 and 5, and elec-

trically operated *plungers* in Fig. 2. But when "various expedients"—plungers or levers—are used to operate the combination claimed in petitioner's patent five years later in 1937, the Court of Appeals for the Ninth Circuit says they are *not equivalents.*[4]

If this decision is allowed to stand, any patent on a lever-operated device can be avoided merely by operating the same mechanism by a plunger.

The United States District Court for the Western District of Oklahoma ruled in accordance with this Honorable Court's decisions with respect to the substitution of equivalents, saying [R. Vol. I, p. 55]:

> "11. The tappet or positioning element described in plaintiff's reissue patent No. 20,827 may be mounted either on a lever or a plunger to move the tappet, since a lever and a plunger perform their functions in the same way and are mechanical equivalents.
>
> "12. The finding 11 is based not only upon the evidence offered on behalf of plaintiff, but also upon the direct testimony of defendant's expert, Dr. Spotts, who testified to the effect that the substitution of plungers for levers is a simple one in the combination covered by claims 7, 8, 9, 10 and 11 of the said reissue patent."

---

[4]The rule properly applicable here has been expressed by this Honorable Court as follows: "That which is common and well known is as if it were written out in the patent and delineated in the drawings." *Webster Loom Co. v. Higgins,* 105 U. S. 580, 586.

B. The Declaratory Judgment Act Enables Any Infringing Manufacturer to Bring Suit Against Petitioner in the Ninth Circuit, Where a Second and Third Suit Are Now in the Courts; and This Honorable Court Should Therefore Decide the Issue of Infringement Now for the Benefit of the Entire Radio Industry.

In *Altoona Publix Theatres v. American Tri-Ergon Corp.*, 294 U. S. 477, the litigation on the patent involved was centered in a single circuit, and this Honorable Court therefore granted certiorari despite the fact that there was no conflict between circuits. In *Mackay Radio and Telegraph Company, Inc. v. Radio Corporation of America,* 306 U. S. 86, 59 S. Ct. 427, 83 L. Ed. 506, there were only two possible litigants, and certiorari was granted because an opinion of this Court would therefore settle the controversy for the entire industry as thus constituted.

Despite the fact that petitioner provided a forum in the Tenth Circuit in which to decide whether respondents' tuners were infringements, respondents refused to intervene there but forced the present controversy in the Ninth Circuit in order to get a rubber-stamped decision based upon the earlier opinion in the *Associated* case. When the district court in Oklahoma decided the *Richards and Conover* case in petitioner's favor, General Motors Corporation, which also uses petitioner's patented combination, made it impossible for petitioner to get a decision against it in another circuit by hurriedly filing a declaratory judgment suit in the U. S. District Court for the Southern District of California, Central Division, Civil Action No. 5781-M. The latter case was recently tried, but no opinion has yet been rendered.

Finding 25 in the Oklahoma action [R. Vol. I, p. 59] showed that tuners of the type here involved "were supplied to the public in approximately 8,000,000 radio sets up to April, 1942." Of this number, about 7,000,000 were made by respondents. In the automotive field, General Motors admitted having made about one million tuners of this type up to 1948. The litigation in the Ninth Circuit thus involves by far the major portion of the tuners that have been made embodying petitioner's combination, and the Supreme Court should therefore decide the issues for the radio industry as a whole.

C. The Court of Appeals for the Ninth Circuit Has Granted a Summary Judgment on Grounds Held Insufficient by Other Federal Courts.

It has already been pointed out in the Statement of the Case that the summary judgment in the instant case is the first that has ever been granted in direct conflict with the judgment of another federal court rendered after a full trial.

When such a summary judgment was proposed in another district court, its propriety was condemned in no uncertain terms by the court, as follows:

> "Furthermore, although the court cannot in the circumstances say that the issue is *res judicata,* the fact that the patent was approved by a court of competent jurisdiction after a full trial (Cold Metal Process Co. v. United Engineering & Foundry Co., D. C., 3 F. Supp. 120) would make it almost presumptuous for this court to declare the patent invalid upon nothing more than a comparison of documents which had been before the other court. * * * Motion overruled." *E. W. Bliss Co. v. Cold Metal Process Co.,* 47 Fed. Supp. 897, at 899.

Regarding the circumstances in which summary judgment is proper, the Court of Appeals for the Eighth Circuit said in the case of *Ramsouer v. Midland Valley R. Co.,* 135 F. 2d 101, 106:

> "In considering such a motion as in a motion for a directed verdict, the court should take that view of the evidence most favorable to the party against whom it is directed, giving to that party the benefit of all favorable inferences that may reasonably be drawn from the evidence. If, when so viewed, reasonable men might reach different conclusions, the motion should be denied and the case tried on its merits."

When the summary judgment was rendered in the instant case, it had already been definitely proved that "reasonable men might reach different conclusions," for the Oklahoma court had just previously held after a full trial that the claims here at issue were clearly valid and clearly infringed by respondents' tuners [Oklahoma Findings 6 and 26, R. Vol. I, pp. 53, 59].

Holding a view regarding summary judgments radically different from that of the Court of Appeals for the Ninth Circuit, the Court of Appeals for the Second Circuit said in the case of *Arnstein v. Porter,* 154 F. 2d 464 at 471:

> "Illustrative of the dangers, in this respect, of summary judgment, if not cautiously employed, is a recent case in the court below. There the judge refused to grant summary judgment for defendants, despite a mass of impressive affidavits, containing copies of corporate records, the accuracy of which plaintiffs did not deny in their affidavits, and which on their face made plaintiffs' case seem nothing but a sham; at the trial, however, cross-examination of

the defendants revealed facts, theretofore unknown by plaintiffs, that so riddled the defendant's case as it had previously appeared on the summary judgment motion that the judge entered judgment against them for several million dollars, from which they did not appeal."

In the recent case of *Associated Press et al. v. United States,* 326 U. S. 1, 6, 65 S. Ct. 1416, 1418, the Supreme Court said:

> "We agree that Rule 56 should be cautiously invoked to the end that parties may always be afforded a trial where there is a *bona fide* dispute of facts between them."

This Honorable Court's remarks in the case of *Sartor et al. v. Arkansas Natural Gas Corporation,* 321 U. S. 620, 627, 64 S. Ct. 724, 728, are particularly in point here:

> "The Court of Appeals below heretofore has correctly noted that Rule 56 authorizes summary judgment only where the moving party is entitled to judgment as a matter of law, where it is quite clear what the truth is, that no genuine issue remains for trial, and that the purpose of the rule is not to cut litigants off from their right of trial by jury if they really have issues to try."

The action of the Court of Appeals for the Ninth Circuit in affirming a summary judgment in direct conflict with that of the Oklahoma court, which was rendered after a full trial, is thus in sharp contrast to the practice advocated by other courts of appeals and by this Honorable Court itself. The situation is clearly one that calls for an exercise of this Court's supervisory powers.

D. Summary Judgment Should Never Be Based Solely Upon the Doctrine of Stare Decisis.

The application of the doctrine of *stare decisis* presupposes that the evidence in the new case is like that in the old. This can never be determined, however, until the evidence is all in. Summary judgment should therefore never be rendered when the doctrine of *stare decisis* is involved, because it deprives the party against whom it is directed of the opportunity of adducing evidence different from that in the earlier case.

E. If an Original Claim That Is Disclaimed From the Reissue Must Be Ignored When Determining Whether the Reissue Claims Are for the Same Invention as the Original, the Validity of a Reisue Patent Can Never Be Finally Determined.

This Honorable Court has long ago held that a reissue must be for the same invention intended to have been claimed in the original, as such intention appears from the original document.[5] The original document must therefore be referred to for evidence of what the patentee intended to bring within the broad scope of his claims. Sometimes excellent evidence of this nature may be found in the original claims themselves. Whether certain narrow reissue claims are within the scope of the original patent, may therefore depend upon the examination of a broad original claim. Subsequent to the grant of the original patent, such original claim may be found to be

---

[5]*Parker and Whipple Company v. Yale Lock Company,* 123 U. S. 87.

of such breadth that it includes more than the patentee had invented, and he may therefore drop the broad claim when obtaining the reissue. It is elementary, however, that this would in no way affect the patentee's right to the narrow reissue claims if they contained patentable subject matter. In the instant case, the patentee discovered seventeen months after the *reissue* patent was granted, that one of the claims held over from the original patent was too broad, and he immediately disclaimed it. The Court of Appeals for the Ninth Circuit, in the *Associated* case followed here, says that this claim (claim 5) must not be considered when examining the original patent, because the disclaimer "speaks from the date of the original patent," citing this Honorable Court's decision in the *Altoona* case, *supra*. If the claim had been dropped when the reissue was obtained, it would have been considered when examining the original patent for evidence of intent; but since the claim was dropped by a disclaimer, the appellate court says that "both the original patent and the reissue must be construed as if claim 5 had never been included in either." The latter statement would of course be true so far as holding an infringer is concerned, but the claim should nevertheless be examinable to see whether the subject matter of the narrower claims is within the scope which the patentee originally intended to claim, even though he may have claimed so much that it later seemed expedient to relinquish the broad claim and rely only upon the narrower ones.

The Ninth Circuit doctrine, if followed, will make it impossible for any patentee to disclaim a broad original claim after it has appeared in a reissue, because if the original patent is construed as if the broad claim had never appeared therein (as the appellate court contended in the *Associated* case), his narrower reissue claims will no longer be for the same invention as the original patent.

Claim 5 of the original and reissue patents did not include any kind of an operating member as an element of the combination, because it is immaterial how motion is transmitted to the tappet. The narrower claims of the ~~reissue~~ original referred to the operating member as a lever. Examining the original claims in the *Associated* case *without considering claim 5,* the appellate court said that all the original claims included a lever and that the reissue claims are therefore not for the same invention unless they include levers.

That the disclaimer of claim 5 on January 16, 1939, could not possibly have any retroactive effect upon the validity of the reissue on August 16, 1938, may be shown by a simple illustration. Suppose that claim 5 had not been disclaimed when the Ninth Circuit Court of Appeals rendered its opinion in the *Associated* case. The Court would then have considered claim 5 when comparing the original and reissue claims, and regardless of whether it held this claim valid or invalid, infringed or not infringed, the Court certainly could not have made its state-

ment that "No leverless combination is disclosed or claimed in the original patent," nor that "if the claims do not include levers, the claims are not for the same invention as the original patent and hence are invalid." The validity of the reissue would therefore have been upheld. Then suppose that claim 5 was subsequently disclaimed. Would that mean that the reissue which had previously been held valid had now become invalid? If so, the validity of a reissue can never be finally determined, and the decision of the Commissioner of Patents could be upset at any subsequent time merely by the disclaiming by the patentee of a broad reissue claim that had appeared in the original patent. This would be true even if this Honorable Court in the meantime had held that the reissue was valid.

Finding 7 of the Oklahoma court [R. Vol. I, p. 54], rendered before the Circuit Court of Appeals reaffirmed its *Associated* decision, has held that the claims of the reissue patent are for the same invention as that set forth in the original. There is thus a conflict between these courts.

Regardless of whether the Oklahoma decision is affirmed by the Court of Appeals for the Tenth Circuit, the Ninth Circuit ruling with respect to the effect of the disclaimer is of such a nature that its consequences can be serious and far reaching. This Honorable Court should therefore pass upon this new point of patent law.

F. The Lower Court Should Have Granted Petitioner's Motion for Permission to Amend the Pleadings.

Rule 15(a) of the Rules of Civil Procedure provides that permission to amend the pleadings be freely granted whenever justice so requires. Petitioner's proposed additional defense [R. Vol. I, pp. 72 *et seq.*] was that respondents were bound by the judgment in the Oklahoma case because they aided in the defense of that action. Not only was this a proper defense entitling petitioner to a trial, but acts of participation already known were verified by petitioner's Second Affidavit in Support of Motion Under Rule 15(d), dated July 8, 1948 [R. Vol. I, pp. 69 *et seq.*]. The appellate court's opinion in the instant case says [R. Vol. I, pp. 264-265], "These allegations were shown to be untrue by an affidavit of Maxwell James filed on July 8, 1946." It was petitioner's affidavit that was filed on July 8, 1946, and the record shows [pp. 66 *et seq.*] that the James affidavit was filed on June 28, 1946. It is difficult to see how Mr. James on June 28, 1946, could have made a denial of allegations not made until July 8, 1946, or why the James' affidavit would have had any more evidential value than that of Leishman.

Additional verification of some of respondents' acts of participation was filed as Defendant's Exhibit 17 [R. Vol. I, pp. 103 to 133], which was a portion of the transcript of the Oklahoma trial, verified by petition [p. 102]. The pertinent portions of the exhibit, and their pertinence, were pointed out in a brief filed with the exhibit.

The motion to file the supplemental answer was denied on December 18, 1946 [R. Vol. I, p. 134].

Evidence of participation is often adduced at a trial, and petitioner should have had the opportunity of thus supplementing the showing made in the affidavit.

If petitioner does not prevail on his other defenses, this Honorable Court should instruct the lower courts to see that he has his day in court on this additional defense that was denied him.

Conclusion.

It is therefore respectfully submitted that this case is one calling for this Court to resolve the conflicts herein set forth and to exercise its supervisory powers by granting a writ of certiorari and thereafter reviewing and reversing the decision of the court below.

LeRoy J. Leishman,
Petitioner in Propria Persona.

IN THE

Supreme Court of the United States

October Term, 1948

No. 372.

LeRoy J. Leisman,

Petitioner,

vs.

Radio Condenser Company and General Instrument Corporation,

Respondents.

PETITIONER'S REPLY BRIEF,

Including Supplementary Information Promised in Petition for Writ of Certiorari.

LeRoy J. Leisman,
2021 Greenfield Avenue, Los Angeles 34,
Petitioner in Propria Persona.

Miller & Compton, Law Printers, Los Angeles. Phone VA. 8-[illegible]

SUBJECT INDEX

TABLE OF AUTHORITIES CITED

Cases.

Statutes

Textbooks

IN THE

Supreme Court of the United States

October Term, 1948

No. 372.

LeRoy J. Leishman,

Petitioner,

vs.

Radio Condenser Company and General Instrument Corporation,

Respondents.

PETITIONER'S REPLY BRIEF,

Including Supplementary Information Promised in Petition for Writ of Certiorari.

The Recent Decision of the Tenth Circuit Court of Appeals in the Richards and Conover Case Has Continued and Sharpened the Conflict Between Courts in the Ninth and Tenth Circuits, Upon Which Petitioner Relied as the First Reason for Allowance of the Writ.

A direct conflict between the appellate court's decision herein and the decision of a district court within the Tenth Circuit was one of the reasons relied upon for allowance of the writ (see petition, p. 8). The Court of Appeals for the Ninth Circuit in the instant case affirmed a summary judgment that the claims at issue are not infringed, while the United States District Court for the

Western District of Oklahoma, in the case of *Leishman v. The Richards and Conover Company,* Civil Action No. 2155, had held the same accused devices to be clear infringements of the same claims. The Oklahoma court's decision was in disagreement with an earlier decision of non-infringement by the Court of Appeals for the Ninth Circuit in the case of *Leishman v. Associated Wholesale Electric Company,* 137 F. 2d 722, upon which the present decision was based. The said *Associated* decision wiped out the lower court's holding in that case that the claims were invalid for want of invention, and ruled *de novo* that there was no infringement without any findings on this issue from the lower court. In that case, the accused devices were patent-wise the same as those accused herein.

The petition for a writ of certiorari herein stated that the decision of the Oklahoma court in *The Richards and Conover* case was on appeal, and that petitioner would advise this Honorable Court of the decision of the Court of Appeals for the Tenth Circuit in that case.

The latter court has now rendered its opinion (at this date unreported), leaving the lower court's holding of infringement undisturbed, but reversing the lower court on the issue of validity. The conflict on the issue of infringement between the courts in the two circuits thus still remains.

Not only did the Court of Appeals for the Tenth Circuit fail to reverse the lower court on the issue of infringement, but it went out of its way to quote from the opinion in the *Associated* case, *supra,* and to point out that it could not go along with the Court of Appeals for the Ninth Circuit in its reasoning that the claims were not infringed and that the operating plungers of the accused devices are not mechanical equivalents of the lever shown

in the patent. It must be here remembered that the opinion herein was based solely upon the *Associated* decision, both the District Court and the Appellate Court following the earlier case upon the basis of *stare decisis.*

The comments of the Court of Appeals for the Tenth Circuit on this subject are particularly significant, because the issue of infringement was a moot question as far as that court was concerned in view of its holding that the claims at issue were invalid; yet it saw fit to devote three paragraphs in its decision and two paragraphs in a footnote to the *Associated* case and to the contention that "the lever in the device of the patent in suit and the plunger in the accused device are not mechanical equivalents"—the point on which the *Associated* case was decided. The Court of Appeals for the Tenth Circuit also referred to one of its own decisions and to a paragraph in Walker on Patents, both of which support the holding of the United States District Court for the Western District of Oklahoma that these elements *are* mechanical equivalents.

The brief for respondents (p. 2) gives an entirely misleading account of the affect of the Tenth Circuit decision, as follows:

> "There is *no* conflict between the decision herein and the decision of any other court. The United States District Court for the Western District of Oklahoma had held the patent valid and infringed in *The Richards and Conover* case, *supra,* but since the filing of the petition for writ of certiorari in the instant case, the Court of Appeals for the Tenth Circuit, on November 15, 1948, *reversed* such holding and held the patent invalid for lack of invention and as anticipated by the prior art." (Emphasis added.)

The Court of Appeals for the Tenth Circuit did *not* reverse the lower court on the subject of infringement—the only issue that has any pertinence here—and the conflict between the Court of Appeals for the Ninth Circuit and the United States District Court for the Western District of Oklahoma not only still stands, but has now been recognized by the Court of Appeals for the Tenth Circuit, which has supported its lower court on that issue. The fact that the Court of Appeals for the Tenth Circuit has held the claims invalid[1] in no way affects the instant case, because the patent, so far as the Ninth Circuit is concerned, is still valid.

In discussing the decision of the Court of Appeals for the Ninth Circuit in the *Associated* case, *supra,* which the Ninth Circuit followed and reaffirmed in its decision herein,[2] the Court of Appeals for the Tenth Circuit stated:

> "In Leishman v. Associated Wholesale Electric Co., 36 F. Supp. 804, the court adjudged claims 7 to 11,

---

[1]A petition for rehearing on the holding of invalidity has just been filed in the Tenth Circuit; and if such holding is not reversed, a petition for writ of certiorari will be filed in that case on the ground that the decision is in conflict with the situation in the Ninth Circuit, where the appellate court in the *Associated* case, *supra,* wiped out the lower court's holding that the claims were invalid for want of invention and thus restored the presumption of validity to the patent. The decision of the Court of Appeals for the Tenth Circuit, instead of wiping out the conflict *as alleged by respondents,* has brought the conflict on infringement into sharper focus and added a new conflicting issue on which there are likewise no concurrent findings between the appellate courts.

[2]In the instant case, the lower court did not rule on the subject of validity, the motion for summary judgment having been confined to the single issue of infringement. Its summary judgment of non-infringement merely followed the appellate court's *Associated* decision on the basis of *stare decisis.* In affirming the lower court's summary judgment, the Court of Appeals for the Ninth Circuit adopted and reaffirmed its decision in the *Associated* case in which it held that the accused device did not infringe because it was operated by plungers instead of levers. It said [R. 263]: "The California court was not at liberty to overrule it."

inclusive, invalid for want of invention. On appeal, the Ninth Circuit held that if claims 7 to 11, inclusive, did not include levers, they were not for the same invention as the original patent and were, therefore, invalid, and that if they did not include levers, the plungers and the levers not being mechanical equivalents, such claims were not infringed by an accused device which contained no lever, and concluded it was not necessary to pass on the validity of claims 7 to 11, inclusive. [The Tenth Circuit decision then referred to a footnote 2 in which it quoted two paragraphs from the Ninth Circuit decision in the *Associated* case.]

"There, as here, the alleged infringing device employs only one rocker and one set of corresponding tappets, and the tappets are mounted on and moved by plungers, not levers.

"However, claims 7 to 11, inclusive, embrace a single rocker and corresponding adjustable tappets mounted on pivots, means for moving each tappet so one of its sides engages one arm of the rocker and rotates the rocker until the other side of the tappet engages the other arm of the rocker, and *they do not specifically embrace a lever means for carrying and moving the tappets; and we are unwilling to rest our decision on the narrow ground that the lever in the device of the patent in suit and the plunger in the accused device are not mechanical equivalents.*[3]" (Emphasis added.)

Footnote No. 3 of the Tenth Circuit decision then referred to the previous Tenth Circuit decision in *Steiner Sales Co. v. Schwartz Sales Co.*, 98 F. 2d 999, at page 1012, and to Walker on Patents, Deller's Edition, Volume 3, page 1706, Section 468. In the *Steiner Sales Co.* deci-

sion, at the page referred to, the Court of Appeals for the Tenth Circuit decided the specific point at issue here, and it decided it in a manner just opposite from the Ninth Circuit's holding herein. In the instant case, the rectilinearly movable plunger of the accused devices is guided in its path by means of *grooves* in the plates provided for the purpose, while the corresponding lever in the patent moves around a pivot or *hinged joint*. At the page to which the Tenth Circuit has referred, its *Steiner Sales Co.* decision said:

> "We are of the opinion that a device having ribs which project from the base of the inner section, extend along the sides thereof and travel in *grooves* or *channels* in the side walls of the outer section, and by means of which the inner section may be moved *back and forth* horizontally, responds to the claims in suit equally with one where the inner section may be tipped back and forth *on a hinged joint*." (Emphasis added.)

Thus, the Court of Appeals for the Tenth Circuit, in referring to this holding and specific page in its *Steiner* decision, has made it very clear that it does not agree with the Court of Appeals for the Ninth Circuit in its ruling that the plungers of the accused devices which travel back and forth in grooves or channels do *not* respond to the claims in suit equally with the lever which is moved back and forth on a pivot or hinged joint.

Section 468 in Walker, to which reference is also made in footnote 3 of the Tenth Circuit's decision in *Leishman v. The Richards and Conover Company,* reads as follows:

> "§468—Tests of Equivalency. Substantial Identity of Performance. Function must be performed in

substantially the same way by an alleged equivalent, as by the thing of which it is alleged to be an equivalent, in order to constitute it such. (Burr v. Duryee, 1 Wall. (68 U. S.) 531, 573, 17 L. Ed. 650 (1864); Werner v. King, 96 U. S. 218, 230 (1877); Dryfoos v. Wiese, 124 U. S. 32, 37 (1888); Forncrook v. Root, 127 U. S. 176, 181 (1888); Sargent v. Burgess, 129 U. S. 19 (1889); Carter Mach. Co. v. Hanes, 70 Fed. 859, 865 (1895); Pittsburgh Meter Co. v. Pittsburgh Supply Co., 109 Fed. 644 (1901); Farmers' Mfg. Co. v. Spruks Mfg. Co., 119 Fed. 644 (1901); McDonough v. Johnson-Wentworth Co., 30 F. (2d) 375, 384, C. C. A. 8 (1928), cert. den. 280 U. S. 572, 74 L. Ed. 624; Farrington v. Haywood, 35 F. (2d) 628, 631, C. C. A. 6 (1929); E. van Noorden Co. v. Cheney Co., 75 F. 2d 298, 300, C. C. A. 1 (1934); Chicago Forging & Mfg. Co. v. Bade-Cummins Mfg. Co., 63 F. (2d) 928, C. C. A. 6 (1933); Chapman-Stein Co. v. Rust Engineering Co., 57 F. (2d) 38, 42, C. C. A. 3 (1932).)

"This substantial sameness of way is not necessarily an identity of merit (Brush v. Condit, 132 U. S. 39, 49 (1889); Standard Folding Bed Co. v. Osgood, 58 Fed. 583, 584 (1893); National Binding Machine Co. v. James D. M'Laurin Co., 186 Fed. 992 (1911)), nor a theoretical scientific sameness. (Gordon v. Warder, 150 U. S. 47, 52 (1893).) In a purely scientific sense, a screw always performs its function in a substantially different way from a lever, and in substantially the same way as a wedge. Screws and wedges are equally inclined planes, while a lever is an entirely different elementary power. But screws and levers can practically be substituted for each other in a larger number of machines than screws and wedges can be similarly substituted. When a lever

and a screw can be interchanged and still perform the same function with a result that is beneficially the same, they are said to perform the same function in substantially the same way. (Turrell v. Spaeth, 3 Bann. & Ard. 458, Fed. Case. No. 14,269 (1878).) Levers and springs are also used interchangeably in the arts (Gouid Coupler Co. v. Pratt, 70 Fed. 622, 627 (895)), and levers of a different class constitute examples of equivalency. (Star Can Opener Co. v. Owen Dyneto Co., 16 F. (2d) 353, C. C. A. 2.)"

These specific references, cited by the Court of Appeals for the Tenth Circuit in support of its *Richards and Conover* opinion, leave no doubt that its views are in conflict with those of the Court of Appeals for the Tenth Circuit herein.

Apparently attempting to argue the merits of the issue as to the equivalency of the plungers and levers, instead of endeavoring to prove that there is no conflict, respondents' brief on page 9 quotes the paragraph from Walker next following the one referred to by the Tenth Circuit in its *Richards and Conover* opinion, and which has just been quoted. Respondents' brief says:

"* * * As stated in Walker on Patents, Deller's Edition, Vol. 3, Section 470, page 1707:

" 'But one thing may be an equivalent of another in one environment, and not such an equivalent in another. * * * Springs and weights are generally equivalents * * *, but where the environment is such that a spring will operate successfully while a weight will not so operate, there they are not equivalents.' " (*Respondents'* own omissions and asterisks.)

That this quotation can in no way help respondents, is clear from the fact that respondents obviously contend that their plungers *do* operate successfully.

The decision of the Court of Appeals for the Ninth Circuit in the instant case, to the effect that the claims are not infringed because the accused tuners are operated by plungers instead of levers as shown in the patent, is clearly in conflict with the opinions of both the United States District Court for the Western District of Oklahoma and the Court of Appeals for the Tenth Circuit. According to the provisions of Rule 38(5b), petitioner is thus entitled to a review of the issue of infringement by this Honorable Court, and in the event that its decision is favorable, he is thereafter entitled to an adjudication of the issue of validity by the District Court in the Ninth Circuit where this case originated, which did not pass upon this issue. This is clear from the Superior Court's ruling in *Triplett et al. v. Lowell et al.,* 297 U. S. 638 at 644, where the court said:

> "It follows that want of disclaimer of claims previously held invalid can never be set up as a bar *in limine* to the maintenance of a second suit upon those claims, and any others of the patent, since *the patentee is entitled to invoke in that suit the independent judgment of the court upon the validity of the claims which have been held invalid.*" (Emphasis added.)

And at page 645:

> "The court whose jurisdiction is invoked by such a suit must determine for itself validity and ownership of the claims asserted, notwithstanding a prior adjudication of invalidity of some of them, unless those issues have become *res adjudicata,* by reason of the fact that both suits are between the same parties or their privies."

Regarding Respondent's Comments on the Other Questions Presented.

In the argument, respondents' brief says: "The patent in suit has been litigated many times over and always unfavorably to the petitioner." This is not the case. The United States District Court for the Western District of Oklahoma ruled in his favor on all issues, stating in Finding 6 [R. Vol. I, p. 53]:

> "Claims 7, 8, 9, 10 and 11 of the reissue patent No. 20,827 are clearly valid, and clearly infringed . . ."

Moreover, there has never been any decision holding that the patent is both invalid and not infringed. The original holding of the district court in the *Associated* case that the claims were invalid for want of invention was wiped out by the Ninth Circuit Court of Appeals, which then ruled *de novo* that the claims were not infringed. The next decision was that of the Oklahoma court, which held the claims *clearly valid and clearly infringed.* In the instant case, there was no trial and no new ruling on the issue of validity, the summary judgment of the lower court and its affirmance by the appellate court being confined to the single question of infringement, on which both courts merely followed the previous *Associated* decision on the basis of *stare decisis.* The Tenth Circuit Court of Appeals in the *Richards and Conover* case has now reversed the lower court on the issue of validity, but made it very plain that the claims, if valid, *are infringed.* As matters now stand, the situation on both issues is thus just opposite in the two circuits. In the Tenth, the claims would be infringed, if valid; and in the Ninth, the claims are valid, but not infringed. There is consequently no concurrence between the two circuits

on any issue, and respondents' remarks on page 7 of its brief that this Honorable Court will not usually disturb concurrent findings are thus clearly not in point. The situation is manifestly one that calls for the supervisory attention of this Honorable Court in order that the confusion may be removed.

Respondents' remarks regarding Question No. 4 and Question No. 5 are the only ones that may need comment here. Question No. 4 had to do with the propriety of the appellate court's action in enjoining petitioner from proceeding against the Galvin Manufacturing Company, which defended the suit in the Oklohoma action. Respondent says that the appellate court simply made an application of the principle of *Kessler v. Eldred,* 206 U. S. 285, 27 S. Ct. 611, 51 L. Ed. 1065. The principle here was different. In *Kessler v. Eldred,* the patent owner had already lost a case against the manufacturer before bringing any action against a customer. In the instant case, petitioner had already won a case against the customer before the manufacturers case was decided. Moreover, the case against The Richards and Conover Company, which Galvin defended, was filed before the manufacturers (respondents herein) had filed their declaratory judgment action.

Question No. 5 involved the propriety of the appellate court's omission of Claim 5 when determining the scope that the original patent was intended to have. Respondents say on page 12 of their brief that the appellate court

> "simply applied with respect to disclaimed claim 5 the well settled rule of law as laid down in Altoona Publix Theatres, Inc. v. American Tri-Ergon Corp., 294 U. S. 477, 491, 55 S. Ct. 455, 79 L. Ed. 1005, 1014 . . ."

The *Altoona* decision had nothing to do with the matter of whether a reissue patent is for the same invention as the original, and the appellate court's *misapplication* of this decision was well brought out in the petition as well as in the brief in support thereof.

Conclusion.

The instant case comes from a circuit in which the presumption of validity was restored to the claims by the action of the appellate court in wiping out a previous holding of invalidity. The decision herein affirmed a summary judgment on the issue of infringement only. The holding that the claims are not infringed is in direct conflict with the opinions of the United States District Court for the Western District of Oklahoma and the Tenth Circuit Court of Appeals. Accordingly, petitioner is entitled to a review of this case under Rule 35(5b), so that the conflict on infringement may be resolved. In the event that this Honorable Court holds that the claims, if valid, are infringed, then petitioner is entitled to an independent adjudication of that issue in the Ninth Circuit.

Respectfully submitted,

LE ROY J. LEISHMAN,

Petitioner in Propria Persona.

IN THE

Supreme Court of the United States

October Term, 1948.

No. 372

LeRoy J. Leishman,

Petitioner,

vs.

Radio Condenser Company and General Instrument Corporation,

Respondents.

BRIEF FOR RESPONDENTS.

Leonard S. Lyon,
Leonard S. Lyon, Jr.,
811 West Seventh Street Building,
Los Angeles 14, California,
Attorneys for Respondents.

Maxwell James,
521 Fifth Avenue,
New York 17, New York,
Of Counsel.

Parker & Company, Law Printers, Los Angeles. Phone TR. 5306.

TOPICAL INDEX

TABLE OF AUTHORITIES CITED

Cases

Textbooks and Statutes

IN THE

Supreme Court of the United States

October Term, 1948.

No. 372

LeRoy J. Leishman,

Petitioner,

vs.

Radio Condenser Company and General Instrument Corporation,

Respondents.

BRIEF FOR RESPONDENTS.

This is a patent infringement case and arose as the result of the filing by respondents of a complaint for declaratory judgment that claims 7 through 11 of Leishman Reissue Patent No. 20,827 are invalid, that respondents have not infringed any of said claims, and praying an injunction prohibiting petitioner from asserting that respondents infringe said reissue letters patent and from prosecuting actions in which devices manufactured by respondents are asserted to be infringements of the patent. The United States District Court for the Southern District of California, Central Division, on summary judgment, held the patent claims 7 through 11 not infringed by respondents and granted the injunction, limiting it, however, not to include the case of *Leishman v. The Richards and Conover Company,* Civil Action No. 2155 in the United States

District Court for the Western District of Oklahoma, and not to include the Galvin Manufacturing Company which assumed the defense in said case. The Galvin Manufacturing Company manufactured radio receiving sets embodying the herein accused devices manufactured by respondents, and The Richards and Conover Company sold such sets to others. The Court of Appeals affirmed the judgment of the District Court that said claims 7 through 11 were not infringed but modified the injunction to include the Galvin Manufacturing Company.

There is no conflict between the decision herein and the decision of any other court. The United States District Court for the Western District of Oklahoma had held the patent valid and infringed in *The Richards and Conover* case, *supra,* but since the filing of the petition for writ of certiorari in the instant case, the Court of Appeals for the Tenth Circuit, on November 15, 1948, reversed such holding and held the patent invalid for lack of invention and as anticipated by the prior art. This decision, *The Richards and Conover Company v. LeRoy J. Leishman,* Appeal No. 3577, has not been reported, but a true copy of same appears in the Appendix.

The findings of fact, conclusions of law, and judgment of the District Court in the instant case are found in the record at pages 86-96. An amendment to the judgment excluding the Oklahoma case and the Galvin Manufacturing Company from the injunction is found at page 134. The opinion of the Court of Appeals is found at pages 258-266, and its decree at pages 267-268.

In this case, petitioner relies upon Rule 38(5b) of the Rules of the Supreme Court, but it is submitted that the instant case presents no reason or grounds for the grant of certiorari such as is required by the rule. The reversal of the Oklahoma case by the Court of Appeals for the Tenth Circuit and the holding of invalidity there remove any possible conflict that might be urged by petitioner in the instant case. The decisions of the Court of Appeals for the Ninth Circuit and of the District Court for the Southern District of California are concurrent and should not be disturbed. *Goodyear Tire & Rubber Co. v. Ray-O-Vac Co.,* 321 U. S. 275, 278, 64 S. Ct. 593, 88 L. Ed. 721, 724; *Williams Mfg. Co. v. United Shoe Machinery Corp.,* 316 U. S. 364, 367, 62 S. Ct. 1179, 86 L. Ed. 1537, 1541.

Statement of the Case.

The patent in suit which issued August 15, 1938 [R. 167, Pltf. Ex. F] is a reissue of patent No. 2,108,538 granted February 15, 1938 [R. 173, Pltf. Ex. H]. Litigation concerning the patent in suit commenced September 12, 1938, in the filing by petitioner of an infringement suit based on claims 7 through 11 of the patent against Associated Wholesale Electric Co. in the District Court for the Southern District of California, Central Division. In that case radio tuners admittedly the same patentwise as the accused tuners of respondents were charged to be infringements of the patent. The District Court, in *Leishman v. Associated Wholesale Elec-*

tric Co., 36 Fed. Supp. 804, held the claims in issue invalid as lacking invention. Petitioner appealed from that decision and on August 11, 1943, in *Leishman v. Associated Wholesale Electric Co.,* 137 F. 2d 722, the Court of Appeals for the Ninth Circuit held said claims 7 through 11 not infringed, basing its decision on the ground that the face of the original patent 2,108,538 shows no intention to cover and secure as the patented invention tuner combinations not including levers. The court therefore held that the reissue claims in issue must be restricted to levers or else be invalid as for a different invention than the original patent. Since the accused tuners, as do respondents' tuners, contained no levers but rather plungers, they did not infringe. Application for writ of certiorari was made to this Court following that decision, and the petition denied. *Leishman v. Associated Wholesale Electric Co.,* 320 U. S. 794, 64 S. Ct. 261, 88 L. Ed. 478.

Two years after the aforesaid decision of the Court of Appeals for the Ninth Circuit, petitioner brought an action for the infringement of the same claims 7, 8, 9, 10 and 11 in the United States District Court for the Western District of Oklahoma, Civil Action No. 2155, against The Richards and Conover Company, a distributor of radio sets manufactured by the Galvin Manufacturing Corporation of Chicago, Illinois, which incorporated the radio tuners of respondents accused herein. These tuners were the same patentwise as those involved in the *Associated Wholesale Electric Co.* case, *supra.* Thereafter, respondents, whose tuners were involved in the Oklahoma litiga-

tion, filed this suit for a declaratory judgment in the District Court for the Southern District of California, the residence of petitioner, and, after answer by petitioner, moved for summary judgment of noninfringement on the ground that the District Court was bound by the prior decision of the Court of Appeals for the Ninth Circuit in *Leishman v. Associated Wholesale Electric Co., supra* [R. 27]. Petitioner, in response to such motion, filed an affidavit [R. 46] and exhibits [R. 177-253] which petitioner contended would have changed the decision of the Court of Appeals had their content been before the court in the *Associated Wholesale Electric Co.* case, but the District Court granted the motion, finding that such asserted evidence could not have changed or affected the ruling of the Circuit Court of Appeals and that no genuine issue as to any material fact respecting the issue of infringement of the patent claims existed [Findings 18 and 19, R. 91]. Petitioner also moved to amend his answer [R. 63] and filed an affidavit [R. 69] showing that Eastern counsel for respondents loaned two models to counsel for The Richards and Conover Company to be used in the Oklahoma litigation. He asserted that such loaning constituted a participation and control by respondents in the Oklahoma case and that they were bound by the decision in that case. Such decision was rendered prior to the signing of the judgment by the District Court in California and held the patent valid and infringed. The District Court in California denied petitioner's motion to amend his answer [R. 133-134], adjudged the claims in issue not infringed [R.

94], and enjoined petitioner from asserting such infringement as to petitioner's devices [R. 98]. The judgment was amended, however, to exclude from the injunction the Oklahoma case and the Galvin Manufacturing Company [R. 133-134].

After the decision by the California District Court petitioner appealed to the Court of Appeals for the Ninth Circuit from the summary judgment, and respondents cross-appealed from that portion of the judgment excluding the Oklahoma case and the Galvin Manufacturing Company from the injunction. At the same time The Richards and Conover Company appealed to the Court of Appeals for the Tenth Circuit from the decision of the District Court of Oklahoma that the patent was valid and infringed. The Court of Appeals for the Ninth Circuit affirmed the summary judgment of the California court but modified said judgment to include the Galvin Manufacturing Company within the injunction. In its opinion [R. 258-266] the Court of Appeals reaffirmed its holding in the *Associated Wholesale Electric Co.* case, *supra,* held that the asserted new evidence presented by Leishman in his affidavit would not have changed the decision in the *Associated Wholesale Electric Co.* case, and found the District Court bound by that decision. Thereafter and following the filing of the instant petition for certiorari, the Court of Appeals for the Tenth Circuit reversed the Oklahoma District Court and held the patent invalid (Appendix).

ARGUMENT.

In view of the concurrent findings of the courts below that the claims in suit are not infringed by petitioner; in view of the prior decisions of the District Court for the Southern District of California in *Leishman v. Associated Wholesale Electric Co., supra,* wherein the reissue claims in suit were held invalid as lacking in invention, and of the Court of Appeals for the Ninth Circuit in that case holding that the patent was not infringed by devices patentwise the same as the devices of respondent in the instant case; and in view of the recent decision of the Court of Appeals for the Tenth Circuit in *The Richards and Conover Company v. Leishman, supra,* wherein the patent was held invalid as lacking invention and as anticipated, it is submitted that this clearly is not a proper case for the grant of a writ of certiorari. This Court has announced that it will not ordinarily disturb concurrent decisions in patent cases where no conflict of decision exists. *Goodyear Tire & Rubber Co. v. Ray-O-Vac Co.,* 321 U. S. 275, 64 S. Ct. 593, 88 L. Ed. 721; *Williams Mfg. Co. v. United Shoe Machinery Corp.,* 316 U. S. 364, 367, 62 S. Ct. 1179, 86 L. Ed. 1537; *General Talking Pictures Corp. v. Western Elec. Co.,* 304 U. S. 175, 58 S. Ct. 849, 82 L. Ed. 1273; *Tennessee Coal I. & R. Co. v. Muscoda Local No. 123,* 321 U. S. 590, 64 S. Ct. 698, 88 L. Ed. 949.

The patent in suit has been litigated many times over and always unfavorably to the petitioner. The case presents no issue of paramount public interest, and a grant

of the instant petition for certiorari would accomplish nothing more than to encourage petitioner to continue in his fruitless litigation of a patent held invalid or not infringed in all cases where the question of its validity or infringement has been finally passed upon.

Questions Presented.

The petition in this cause is based upon six alleged questions. The first question presented is with reference to asserted equivalency between the levers of the patented combination and the plungers of respondents' device. Petitioner urges conflict between the Court of Appeals for the Ninth Circuit and the District Court for the Western District of Oklahoma on this issue. However, the District Court for the Western District of Oklahoma has been reversed by the Court of Appeals for the Tenth Circuit in *The Richards and Conover Company v. Leishman,* decided November 15, 1948 (Appendix), although in that case the instant patent is disposed of as invalid for lack of invention. The court there refers to *Leishman v. Associated Wholesale Electric Co.,* 137 F. 2d 722, the decision upon which the instant case is based, and quotes therefrom to the effect that in the accused combination the plungers perform but a part only of the function performed by the levers of the patented combination and that the part so performed is not performed in the same way nor in substantially the same way, and that the plungers and levers are therefore not equivalents (Appendix p. 6).

Petitioner urges that the courts below erred in finding a lack of equivalency between the levers of the patented combination and the plungers of respondents' devices, stating that the functions of the two are identical and refer-

ring to various examples of plungers and levers and to copies of ten patents introduced below. Petitioner misconceives the holding of the Court of Appeals and the law of equivalency. The court below has merely held, first, that the claims in issue cannot be construed to cover plunger-operated devices lest the patent be for a different invention than was intended to be patented in and by the original patent No. 2,108,538 and hence invalid; and, second, that in the patented combination respondents' plungers perform but a part of the function of the levers in the patented combination and perform such part in a different way. This conclusion was arrived at after full trial in the *Associated Wholesale Electric Co.* case and was reaffirmed in the instant case after consideration of the asserted new evidence presented by petitioner. That plungers and levers may be equivalents under other circumstances and that plungers and levers are shown in the examples pointed out by petitioner and in the ten patents presented by petitioner is immaterial. As stated in Walker on Patents, Deller's Edition, Vol. 3, Section 470, page 1707:

> "But one thing may be an equivalent of another in one environment, and not such an equivalent in another situation. * * * Springs and weights are generally equivalents * * *, but where the environment is such that a spring will operate successfully while a weight will not so operate, there they are not equivalents. * * *"

Question 2 asks whether it is proper for a federal court to grant a summary judgment in direct conflict on identical issues with the judgment of another federal court rendered after full trial. This question has become moot in view of the decision by the Court of Appeals for the Tenth

Circuit above discussed. As heretofore stated, that decision reversed the lower Oklahoma court. Moreover, as pointed out by the Court of Appeals for the Ninth Circuit in the instant case, the California District Court was bound by the decision in the earlier *Associated Wholesale Electric Co.* case and the now reversed decision of the Oklahoma court could have no effect upon it.

The third question presented refers to the propriety of granting summary judgment upon the basis of *stare decisis*. As stated by the Court of Appeals for the Ninth Circuit below, the propriety of granting summary judgment depends upon Rule 56 of the Federal Rules of Civil Procedure, 28 U. S. C. A. following section 723, as it existed prior to March 19, 1948. Said rule is set forth [R. 261]:

> " 'A party seeking to recover upon a claim * * * or to obtain a declaratory judgment may, at any time after the pleading in answer thereto has been served, move with or without supporting affidavits for a summary judgment in his favor;' that 'The adverse party * * * may serve opposing affidavits;' and that 'The judgment sought shall be rendered forthwith if the pleadings, depositions, and admissions on file, together with the affidavits, if any, show that * * * there is no genuine issue as to any material fact and that the moving party is entitled to a judgment as a matter of law.' "

In accordance with said rule, respondents moved with supporting affidavits for summary judgment [R. 27-35]. Petitioner served an opposing affidavit presenting what petitioner urged was new evidence which would have changed the decision of the Court of Appeals in the *Asso-*

ciated Wholesale Electric Co. case had such evidence been before it then [R. 46]. The District Court reviewed this asserted new evidence and held that there was no genuine issue as to any material fact, and this holding was affirmed by the Court of Appeals. Clearly, respondents were entitled to judgment as a matter of law. Compelled by the reissue statute (Revised Statutes 4916, Title 35 U. S. C. Section 64) to conclude that the patent in suit must be restricted to a lever-operated device, the Court of Appeals had held in the *Associated Wholesale Electric Co.* case that plunger-operated tuners were not covered by the instant patent. No evidence appearing that could change that decision and respondents' tuners being the same as those accused in the *Associated Wholesale Electric Co.* case, respondents were entitled to judgment as a matter of law.

Question 4 raises the point as to whether it was proper for the Court of Appeals for the Ninth Circuit to enjoin petitioner from bringing suit based on the instant patent against the Galvin Manufacturing Company, respondents' customer. Such injunction is simply an application of the principle of *Kessler v. Eldred,* 206 U. S. 285, 27 S. Ct. 611, 51 L. Ed. 1065, which held that a decree in a patent suit in favor of a defendant manufacturer entitled that manufacturer to continue in the business of manufacturing and selling the hitherto accused devices throughout the United States without molestation by the patentee in the form of suits against the manufacturers' customers. The rule of law laid down in *Kessler v. Eldred* has never been questioned and has been uniformly adhered to and followed. *Cf. Toledo Scale Co. v. Computing Scale Co.,* 261 U. S. 399, 426, 43 S. Ct. 458, 67 L. Ed. 719, 730; *Steel-*

man v. All Continent Corp., 301 U. S. 278, 291, 57 S. Ct. 705, 81 L. Ed. 1085, 1093; *Commercial Acetylene Co. v. Avery Portable Lighting Co.*, 159 Fed. 935 (C. C. A. 7); *Goodyear T. & R. Co. v. Rubber Tire W. Co.*, 164 Fed. 869, 871; *Bryant Elec. Co. v. Marshall*, 169 Fed. 426, 430.

The fifth question argues that error was committed in the *Associated Wholesale Electric Co.* case, *supra*, in the failure of the Court of Appeals for the Ninth Circuit there to consider a disclaimed claim in arriving at what the original patent No. 2,108,538 intended as shown upon its face to have been covered and secured. The Court of Appeals for the Ninth Circuit in the *Associated Wholesale Electric Co.* case simply applied with respect to disclaimed claim 5 the well settled rule of law as laid down in *Altoona Publix Theatres, Inc. v. American Tri-Ergon Corp.*, 294 U. S. 477, 491, 55 S. Ct. 455, 79 L. Ed. 1005, 1014, that a disclaimer "speaks from the date of the original patent," and therefore did not consider said disclaimed claim 5 in arriving at the evident intent of the patentee. This Court has had opportunity to review such holding of the Court of Appeals but denied the petition for writ of certiorari filed by petitioner after the *Associated Wholesale Electric Co.* case. *Leishman v. Associated Wholesale Electric Company*, 320 U. S. 794, 64 S. Ct. 261, 88 L. Ed. 478.

Finally, question 6 urges that the courts below erred in refusing to permit petitioner to amend his answer to the

complaint in order to make the additional defense that respondents were bound by the judgment in the Oklahoma case. Petitioner's proposed amended answer appears in the record at pages 72-86 and an affidavit in support of same appears in the record at pages 69-72. An opposing affidavit of Maxwell James, Eastern counsel for respondents, appears in the record at pages 66-68. Despite the allegation in the proposed amended answer that respondents participated in and jointly controlled the defense in the Oklahoma case, the affidavits both of petitioner and of Maxwell James clearly established that Maxwell James merely loaned to the attorney for The Richards and Conover Company two models of prior art devices. Clearly, such loaning did not constitute that privity or control necessary to create an estoppel by judgment. *Bigelow v. Old Dominion Copper Mining & Smelting Co.*, 225 U. S. 111, 32 S. Ct. 641, 56 L. Ed. 1009. The Court of Appeals below held in answer to petitioner's argument that he should have been permitted to file his supplemental answer that "even if the supplemental answer had been filed, still the pleadings, together with the affidavits, would have showed that there was no genuine issue as to any material fact and that Condenser and General were entitled to a judgment as a matter of law." [R. 264.] Lastly, even though petitioner were correct in his contentions, he could not profit thereby in view of the recent decision of the Court of Appeals for the Tenth Circuit reversing the holding of the District Court in Oklahoma.

Conclusion.

It is submitted that this case does not submit any sufficient reason for the grant of a writ of certiorari within the ruling and practice of this Court. This case involves merely concurrent decisions of the District Court and the Court of Appeals, and it presents no disputed issue of patent law nor principle conflicting with any applicable decision of this Court.

Respectfully submitted,

LEONARD S. LYON,
LEONARD S. LYON, JR.,
Attorneys for Respondents.

MAXWELL JAMES,
Of Counsel.

APPENDIX.

Tenth Circuit.

No. 3577—September Term, 1948.

The Richards and Conover Company, a corporation,

vs.

LeRoy J. Leishman.

[November 15, 1948.]

Foorman L. Mueller (Josiah G. Holland on the brief) for appellant.

John Flam (J. B. Dudley on the brief) for appellee.

Before Phillips, Chief Judge, and Bratton and Huxman, Circuit Judges.

Phillips, Chief Judge, delivered the opinion of the court.

Leishman brought this action against The Richards and Conover Company for alleged infringement of claims 7 to 11, inclusive,[1] of Reissue Patent No. 20827.

---

[1]The claims in suit read:

"7. In combination with the tuning mechanism of a radio apparatus, of a rotatable rocker mounted upon a shaft operatively connected with said mechanism, said rocker having two arms each extending on a different side of said shaft; means adjustably movable about a pivot and acting upon bodily movement in one direction to slidably engage either arm of said rocker and push it in one direction to an angular position at which the movement of said rocker is arrested by the collision of said means and the oppositely moving other arm of said rocker; and a spring for holding said means in a normally inoperative position; said rocker constructed so as to admit at least a portion of said means between said arms.

"8. The combination with the tuning mechanism of a radio apparatus, of a rotatable rocker mounted upon a shaft opera-

From a decree holding the claims in suit valid and infringed, The Richards and Conover Company has appealed.

The original patent was applied for December 15, 1934, and granted February 15, 1938. The reissue patent was applied for May 23, 1938, and granted August 16, 1938. The original patent contained six claims. The reissue patent contained the claims of the original patent and additional claims 7 to 12, inclusive.

---

tively connected with said mechanism, said rocker having two arms each extending on a different side of said shaft; means adjustably movable about a pivot and acting upon bodily movement in one direction to slidably engage either arm of said rocker and push it in one direction to an angular position at which the movement of said rocker is arrested by the collision of said means and the oppositely moving other arm of said rocker; and a spring for holding said means in a normally inoperative position; the axis of said means being substantially co-axial with the axis of said rocker when said means is in engagement with both of said arms.

"9. In a mechanism for angularly positioning a control of a radio device, a combination including: a rotatable rocker comprising two shoulders lying on opposite sides of the axis of said rocker; and a manually movable operating means comprising an adjustably mounted positioning element adapted upon movement of said means in one direction to engage one shoulder of said rocker and rotate said rocker to a position at which the movement of said element is arrested by the collision of said element and the oppositely moving other shoulder of said rocker; said rocker constructed to permit at least a portion of said means to pass beyond a line connecting the points on said shoulders at which the shoulders are contacted by said means.

"10. In a mechanism for angularly positioning a control of a radio device, a combination including: a rotatable rocker comprising two shoulders lying on opposite sides of the axis of said rocker; a manually movable operating member; and a positioning element adjustably mounted on a pivot carried by said member; said element adapted upon movement of said member in one direction to engage one shoulder of said rocker and rotate said rocker to a position at which the movement of said rocker is arrested by the collision of said element and the oppositely moving other shoulder of said rocker; the axis of said element and the axis of said rocker being substantially

The patent is for an apparatus for turning rotatable rockers about their axis to predetermined positions.

The device of the patent is illustrated by Figures 1 and 2 of the patent drawing.

It will be noted that Figure 1 illustrates two rockers, 48 and 54. Claims 1 to 4, inclusive, 6 and 12 cover a device with two or more rotatable rockers. However, the claims in suit are limited to one rotatable rocker.

---

co-axial when said element is in engagement with both of said shoulders.

"11. In a mechanism for angularly positioning a control of a radio device, a combination including: a rotatable rocker comprising two arms lying on opposite sides of the axis of said rocker; a manually movable operating member; a positioning element adjustably mounted on a pivot carried by said member; said element adapted upon movement of said member in one direction to engage one arm of said rocker and rotate said rocker to a position at which the movement of said rocker is arrested by the collision of said element and the oppositely moving other arm of said rocker; said rocker having a recess between said arms so that the axis of said element and the axis of said rocker may be substantially coaxial when said element is in engagement with both of said arms; and means operable from the external end of said member for holding said element in adjusted position."

On January 12, 1939, Leishman disclaimed claim 5 of the reissue patent.

On November 10, 1939, Leishman filed a qualified disclaimer reading as follows:

"Hereby disclaims from the scope of claim 8 of said Letters Patent all structure except that in which the rocker is so constructed that it may act as a common follower for a plurality of such recited movable means; and

"Disclaims from the scope of claim 9 of said Letters Patent all structure except that in which the positioning element is so adjustably mounted that it may be fixed and maintained in its adjusted position irrespective of repeated operations of said operating means; and

"Disclaims from the scope of claim 10 of said Letters Patent all structure except that in which the positioning element is so adjustably mounted that it may be fixed and maintained in its adjusted position irrespective of repeated operations of said operating member."

One purpose of the patented device is to provide an apparatus for simultaneously turning one variable condenser to bring in a radio broadcast and a second variable condenser to bring in a television broadcast. Such a device embraces a pair of rotatable rockers, one connected with the radio and the other with the television condenser shaft. Each rocker is movable by a corresponding tappet frictionally clamped in a predetermined position on a lever assembly. Each tappet is mounted on a pivot so that it can be adjusted to different angular positions. One end of the lever assembly is pivoted on a shaft. When the lever is depressed, one side of each tappet engages an arm of its corresponding rocker and rotates that rocker until both arms of that rocker are in full engagement with both sides of its corresponding tappet, thus bringing each rocker to a position of rest. It will be observed that the position to which the tappet is adjusted determines the point at which the rocker comes to rest and the wave length to which the condenser is tuned, and that by one movement of the lever, each condenser is brought into a predetermined position. Adjustment is effected by loosening a wing nut on a setscrew mounted on the lever and extending through a recess in the tappet, depressing the lever, manually moving the condenser and its corresponding rocker to a desired predetermined position, moving the tappet into an angular position so that each of its sides is in complete engagement with its corresponding rocker arm, and then tightening the setscrew so as to hold the tappet in such angular position.

There is a recess in each rocker between the two opposite arms thereof. Each tappet has a projecting portion through which its pivot extends. When the lever is depressed, that portion of the tappet through which its pivot

extends moves into the recess in the rocker, and the axis of the tappet and the axis of the rocker become coaxial. This coaxial relationship is important because it insures accuracy at the time of the adjustment of the tappet. When each side of the tappet is brought into engagement with its corresponding arm of the rocker, the latter having been set at a predetermined and desired position, with coaxiality between the axis of the tappet and the axis of the rocker, pressure on the lever to hold the tappet in engagement with the rocker while the setscrew is being tightened will not result in movement of the rocker. Absent such coaxiality, pressure on the lever bringing the tappet into full engagement with the rocker, when the latter is in certain angular positions, would have a tendency to move the rocker.

The alleged infringing device employs a metal bar in the form of a plunger to which an adjustable tappet is attached. The plunger moves in guides. It carries a setscrew by which the tappet can be loosened for adjustment and held rigid at a desired angular position. As the plunger moves forward, one side of the tappet engages the rocker and rotates it until each side of the tappet is in engagement with its corresponding rocker arm. There is a recess in each rocker between the two opposite arms thereof. Each tappet has a projecting portion through which its pivot extends. When the plunger is pushed forward, the pivot of the tappet moves into the recess in the rocker and when each side of the tappet is completely engaged with its corresponding rocker arm, the axis of the tappet is substantially coaxial with the axis of the rocker. Movement of the shaft of the rocker is communicated by ratchet gears to the shaft upon which the movable condenser plates are mounted. By moving the plun-

ger forward, the tappets engage and move the rotatable rocker shaft which, in turn, by means of the ratchet gears, turns the condenser shaft and thus adjusts the condenser to the wave length of a desired station.

In Leishman v. Associated Wholesale Electric Co., 36 F. Supp. 804, the court adjudged claims 7 to 11, inclusive, invalid for want of invention. On appeal, the Ninth Circuit held that if claims 7 to 11, inclusive, did not include levers, they were not for the same invention as the original patent and were, therefore, invalid, and that if they did include levers, the plungers and the levers not being mechanical equivalents, such claims were not infringed by an accused device which contained no lever, and concluded it was not necessary to pass on the validity of claims 7 to 11, inclusive.[2]

There, as here, the alleged infringing device employs only one rocker and one set of corresponding tappets, and

---

[2]See Leishman v. Associated Wholesale Electric Co., 137 F. 2d 722, 727, where the court said:

"These claims, it will be observed, are for combinations each of which includes a rocker. Whether the combinations include tappets and levers is not clear. If they do not include levers, the claims are not for the same invention as the original patent and hence are invalid. If they do include levers, the claims are not infringed, for the accused device contains no lever.

"The accused device (a mechanical tuner for a radio receiving set) is manufactured by the Crosley Radio Corporation and sold by appellee. It has a rocker which is the equivalent of appellant's rocker 48. It has no rocker 54 nor any equivalent thereof. It has tappets each of which is the equivalent of appellant's tappet 61. It has no tappet 62 nor any equivalent thereof. It has no lever of any kind or character. Its tappets are operated (made to engage the rocker) by means of plungers. The plungers perform a part, and only a part, of the function performed by appellant's levers F and 66. The part so performed is not performed in the same way, or in substantially the same way. Hence the plungers and the levers are not equivalents."

the tappets are mounted on and moved by plungers, not levers.

However, claims 7 to 11, inclusive, embrace a single rocker and corresponding adjustable tappets mounted on pivots, means for moving each tappet so one of its sides engages one arm of the rocker and rotates the rocker until the other side of the tappet engages the other arm of the rocker, and they do not specifically embrace a lever means for carrying and moving the tappets; and we are unwilling to rest our decision on the narrow ground that the lever in the device of the patent in suit and the plunger in the accused device are not mechanical equivalents.[3]

The use of levers and adjustable tappets mounted thereon to rotate rockers was well known in the art when Leishman entered the field. The prior patent to Marschalk, No. 2,072,897, granted March 9, 1937, discloses a lever assembly, an adjustable tappet pivotally mounted thereon, and a rocker, the shaft of which communicates by ratchet gears with a shaft on which movable radio condensers are mounted, so arranged that by depressing the lever, the rocker will be rotated by the tappet to a predetermined position to which the tappet has been adjusted, and the rotation of the rocker will, in turn, rotate the condenser shaft so as to tune the radio to a desired wave length. Marschalk, however, does not disclose the

---

[3]Cf. Steiner Sales Co. v. Schwartz Sales Co., 10 Cir., 98 F. 2d 999, 1012.

See Walker on Patents, Deller's Ed., Vol. 3, p. 1706, §468.

element of coaxiality of the axis of the tappet and the axis of the rocker embraced in claims 8, 10, and 11. It is clear, therefore, that claims 7 and 9 are anticipated by Marschalk and that claims 8, 10, and 11 are likewise anticipated by Marschalk, unless the adding to the combination disclosed by Marschalk of the element of coaxiality amounted to invention over Marschalk. The principal of coaxial relationship and its importance, where it is desired that two parts of a machine operate together harmoniously, has been within the knowledge, for many years, of ordinary mechanics skilled in their art.

In order to rise to the dignity of invention, the conception of a patent must be the result of the exercise of the inventive or creative faculty, not of mere mechanical skill.[4]

Mechanical skill is but the display of the expected skill of the calling; it involves only the exercise of the ordinary faculties of reasoning, aided by the special knowledge and the facility of manipulation which is acquired through habitual and intelligent practice of the art and it is in no sense the creative work of that inventive faculty which it is the purpose of the Constitution and the patent laws to encourage and reward.[5]

---

[4]Callison v. Boyle, 10 Cir., 95 F. 2d 575, 576;
Turner v. Goldstein, 10 Cir., 154 F. 2d 338, 341.

[5]Callison v. Dean, 70 F. 2d 55, 58;
Hollister v. Benedict & Burnham Mfg. Co., 113 U. S. 59, 73.

That which would readily appear to one acquainted with the prior art and skilled in that art involves merely mechanical skill.[6]

Here, we think, the desirability of having the axis of the tappet and the axis of the rocker coaxial, when the tappet is in full engagement with the arms of the rocker, and the necessary changes in Marschalk's device to effect that result, would readily occur to one acquainted with the prior art and skilled in that art and would involve the exercise of mere mechanical skill.

We conclude, therefore, that claims 8, 10, and 11 did not constitute invention over Marschalk and that all of the claims in suit were anticipated by Marschalk.

The judgment is REVERSED and the cause REMANDED with instructions to enter a decree adjudging the claims in suit invalid for want of invention.

---

[6]Callison v. Dean, 10 Cir., 70 F. 2d 55, 58;
Id. 10 Cir., 95 F. 2d 575, 576;
Turner v. Goldstein, 10 Cir., 154 F. 2d 338, 341.

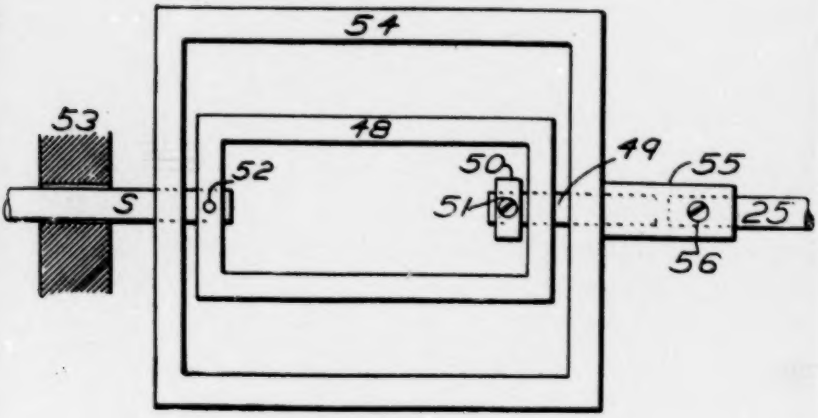
54
53
48
52
50
49
55
S
51
25
56

Fig. 1

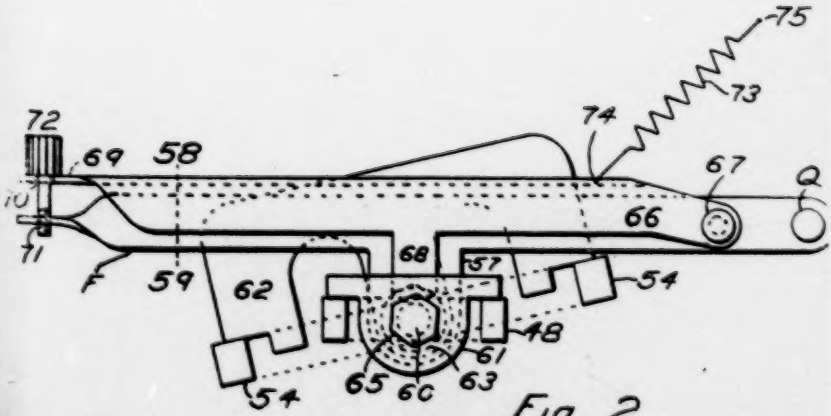
75
73
72
74
69
58
67
Q
10
66
71
68
57
F
59
62
54
48
61
54
65
60
63

Fig. 2

IN THE

Supreme Court of the United States

October Term, 1948.
No. 372.

LeRoy J. Leishman,

Petitioner,

vs.

Radio Condenser Company and General Instrument Corporation,

Respondents.

PETITION FOR REHEARING OF ORDER ON PETITION FOR WRIT OF CERTIORARI AND BRIEF IN SUPPORT THEREOF.

LeRoy J. Leishman,
2921 Greenfield Avenue, Los Angeles 34,
Petitioner, in Propria Persona.

Parker & Company, Law Printers, Los Angeles. Phone MA. 6-9171.

SUBJECT INDEX

TABLE OF AUTHORITIES CITED

Cases

Statutes

Textbook

IN THE

Supreme Court of the United States

October Term, 1948.
No. 372.

LeRoy J. Leishman,

Petitioner,

vs.

Radio Condenser Company and General Instrument Corporation,

Respondents.

PETITION FOR REHEARING OF ORDER ON PETITION FOR WRIT OF CERTIORARI.

Brief Statement of Intervening Circumstances.

The original petition for a writ of certiorari herein was filed because of a conflict between the decision of the Court of Appeals for the Ninth Circuit herein [R. Vol. III, pp. 258 *et seq.*] and a decision of the U. S. District Court for the Western District of Oklahoma in the unreported case of *Leishman v. The Richards and Conover Company,* Civil Action No. 2155.

The said district court within the Tenth Circuit ruled that the claims here at issue were "clearly valid and clearly infringed", and the Court of Appeals for the Ninth Circuit upheld a *summary judgment* of the U. S. District Court for the Southern District of California on

the single ground that the same devices involved in the Oklahoma action did *not* infringe the said claims.

When the petition for a writ of certiorari was originally filed, the Oklahoma decision was on appeal before the Court of Appeals for the Tenth Circuit, and although the hearing therein had already been held the decision had not yet been rendered. The petition requested that action thereon be upheld pending the decision of the latter Appellate Court. On November 15, 1948, the said Court of Appeals for the Tenth Circuit rendered its opinion, reversing the lower court on the single issue of validity. On December 13, 1948, this Honorable Supreme Court denied the petition for a writ of certiorari. Six days later, on December 19, 1948, the Court of Appeals for the Tenth Circuit granted a rehearing, and on December 24, 1948, Mr. Justice Douglas extended the time for filing a petition for rehearing of the petition for a writ of certiorari until fifteen days following the anticipated new decision of the Court of Appeals for the Tenth Circuit. The said anticipated new decision was rendered on January 20, 1949. In the meantime, this Honorable Court has rendered an opinion in the case of *Jungersen v. Ostby and Barton Company, et al.; Ostby and Barton, et al. v. Jungersen; Jungersen v. Baden, et al.*, in which certiorari was granted in a situation very closely paralleling the situation that now prevails in the instant case.

The latter decision of this Honorable Court and the two aforementioned decisions of the Court of Appeals for the Tenth Circuit were all three rendered since the original petition for a writ of certiorari was filed herein, and these decisions have so altered the questions presented and the reasons then relied upon for allowance of the writ that the original questions and reasons have now been largely

superseded. Moreover, the changed status now makes other grounds that could previously have been presented have greater relevance, and they are consequently presented here for the first time. Because of these various changes, it is believed that the merits of this petition may be appraised more readily if the case is re-stated as it now appears.

Summary Statement of the Case as It Now Stands.

The reissue patent here involved is a simple one having a specification of only three columns. Yet the patentee-petitioner has been unable in ten years of litigation to have the issues of validity and infringement authoritatively adjudicated. The same five of its claims have been the subject of four infringement suits—two of them filed under the Declaratory Judgment Act by manufacturers who have made nine million push button tuners for radio sets embodying the combination set forth in the claims.

The history of the litigation has been one of piecemeal adjudications and harassment by manufacturers who seek to appropriate the teachings of the patent.

The merits of the present petition and the nature of the present case can best be seen if the suit is considered in its relationship to the other three actions.

The five claims that have been involved in all this litigation cover the features of the invention that make a push button radio tuner easy to adjust or "set" so that it will subsequently tune in the desired stations accurately. In prior art tuners, in order to achieve the necessary ease of adjustment, it had been necessary to include extra mechanism to prevent the parts of the tuner from moving during the adjusting process.

The first suit involving these five claims was that of *Leishman v. Associated Wholesale Electric Company,* 36 Fed. Supp. 804, in which the trial court held the claims invalid as lacking invention but stated in the opinion (p. 806):

> "* * * But it cannot be seriously denied that the accused device uses the rotatable rocker, adjustable tappet and when brought to rest the two parts are coaxial—the essential elements contained in the plaintiff's structure."

The District Court thus recognized the presence of infringement, but failed to make any specific ruling or finding thereon.

Petitioner appealed from the lower court's holding of invalidity in the *Associated* case, but the first action of the Court of Appeals for the Ninth Circuit, in an opinion written by Judge Mathews, was to dismiss the appeal on the ground that it had been taken too late. This Honorable Court, in an opinion interpreting Rule 52b, unanimously held that the appeal was timely and that the Appellate Court's reasoning was "artificial and untenable." (318 U. S. 203.) The Court of Appeals, in an opinion delivered by Judge Mathews, then wiped out the lower court's holding of invalidity (137 F. 2d 722), but held that infringement had been avoided by operating the combination by means of a plunger instead of a lever. Certiorari was denied December 6, 1943.

Inasmuch as this Honorable Court has said in Rule 38(5b) and elsewhere that it will review patent cases when a conflict develops between circuit courts of appeals, petitioner then undertook to develop such a conflict by filing the suit mentioned in the first paragraph hereof

against The Richards and Conover Company (Civil Action No. 2155) in the U. S. District Court for the Western District of Oklahoma, alleging infringement by push button radio tuners that were patentwise the same as those accused in the Ninth Circuit case of *Leishman v. Associated Wholesale Electric Company, supra*, in which it was held that the substitution of plungers for levers avoided infringement.

The manufacturers of the devices involved in the Oklahoma action then endeavored to present petitioner from obtaining an independent adjudication outside the Ninth Circuit, and these manufacturers accordingly filed the instant suit under the Declaratory Judgment Act seeking an injunction against the Oklahoma proceedings, and a summary judgment of non-infringement was requested on the ground that the earlier decision in the *Associated* case, *supra*, although not *res adjudicata*, was nevertheless *stare decisis*.

Before the lower court acted in the instant summary judgment proceeding, the trial of the *Richards and Conover* case was held in the U. S. District Court for the Western District of Oklahoma, where the court held the claims here at issue *clearly valid and clearly infringed* and stated that petitioner's tuner could be operated either by plungers or levers, these operating members being well-known mechanical equivalents for such purposes. This judgment was thus in direct conflict with that of the Court of Appeals for the Ninth Circuit in the *Associated* case.

Subsequent to the entry of the judgment in the Oklahoma suit, the lower court granted the motion for summary judgment of *non-infringement* in the instant action

on the basis that the *Associated* decision was controlling. Despite a mass of new evidence in the present record to show that plungers and levers were well known in the prior art as alternative means for operating automatic push button tuners, the Court of Appeals for the Ninth Circuit, in a decision written by Judge Mathews, nevertheless affirmed the summary judgment of non-infringement and reaffirmed its decision in the *Associated* case. The petition for a writ of certiorari herein was then filed within the time period as extended by Mr. Justice Douglas, this petition setting forth the conflict with the District Court in the Tenth Circuit.

Subsequently, the Court of Appeals for the Tenth Circuit reversed the U. S. District Court for the Western District of Oklahoma on the issue of validity only (79 U. S. P. Q. 316); and while the issue of infringement was thus a moot question as far as the appellate court was concerned, the latter court nevertheless went out of its way to express disagreement with the *Associated* decision and to refer to a paragraph in Walker on Patents supporting the lower court's views on infringement, and the appellate court cited one of its own prior decisions where it had decided the specific question that a member that "may be moved back and forth horizontally," as does the plunger in this case, is the equivalent of one that may be moved "on a hinged joint," as does the operating lever shown in the patent here in suit.

The decision of the Court of Appeals for the Tenth Circuit thus created an over-all situation in which the claims here at issue are valid but not infringed by respondents' devices in the Ninth Circuit because these devices are operated by plungers instead of levers as shown in the patent, whereas in the Tenth Circuit the claims are

invalid but would otherwise be infringed by respondent's devices. Petitioner thus obtained the sought-for conflict between the circuits on the equivalency of plungers and levers, the only point in dispute on the issue of infringement. But an additional conflict developed on the issue of validity, because the Tenth Circuit's ruling that the claims are invalid for want of invention is in conflict with the situation in the Ninth Circuit where the appellate court in the *Associated* case, *supra*, wiped out the lower court's holding that the claims were invalid for want of invention.

Immediately after the Court of Appeals for the Tenth Circuit rendered the aforementioned decision reversing the lower court on the issue of validity and supporting the lower court's views on infringement, respondents herein filed a brief opposing the issuance of a writ of certiorari; and respondents' brief (p. 2) erroneously informed this Honorable Court:

> "There is *no* conflict between the decision herein and the decision of any other court. The United States District Court for the Western District of Oklahoma had held the patent valid and infringed in *The Richards and Conover case, supra,* but since the filing of the petition for writ of certiorari in the instant case, the Court of Appeals for the Tenth Circuit, on November 15, 1948, ***reversed*** such holding and held the patent invalid for lack of invention and as anticipated by the prior art." (Emphasis added.)

Petitioner filed a Reply Brief pointing out that the facts were not as indicated in Respondent's Brief; but the said Reply Brief was filed only a few days before the petition was formally denied, and the Reply Brief may thus have

arrived too late for the erroneous information to be corrected in time for this Honorable Court's consideration.

Inasmuch as it has been the practice of this Honorable Court to resolve the conflicting views of courts of appeals, petitioner believed that his petition may have been denied because both courts of appeals had held against him, although on totally different grounds. He therefore secured an extension of time for filing this petition for rehearing, believing that the Court of Appeals for the Tenth Circuit might reverse its own ruling of invalidity following the rehearing which said appellate court had already set for January 4, 1949. But the fact that the said appellate court, in its new decision of January 20, 1949, did not reverse its own ruling of invalidity, now seems immaterial, for this Honorable Court has in the meantime rendered an opinion where certiorari was granted to resolve a conflict between Courts of Appeals that had *both* held *against* the petitioner. The said opinion of this Honorable Court was rendered in *Jungersen v. Ostby and Barton Company et al.; Ostby and Barton Company et al. v. Jungersen; Jungersen v. Baden et al.*, decided January 3, 1949. In one of the *Jungersen* cases, the Court of Appeals for the Second Circuit affirmed the lower court which held all the claims invalid; and in another of the *Jungersen* cases, the Court of Appeals for the Third Circuit affirmed a decision holding only a part of the claims invalid but the rest not infringed. Although Jungersen thus lost both suits, this Honorable Court nevertheless said:

> "* * * We granted certiorari in both cases in order to settle the conflict. 334 U. S. 835."

The present petitioner is in a more favorable patent situation than Jungersen, because only in the Tenth Circuit is there any holding of invalidity against the patent and only in the Ninth Circuit is there any holding that the claims are not infringed. The holding of non-infringement in the instant case is in conflict with the findings of infringement by the U. S. District Court for the Western District of Oklahoma which the Court of Appeals for the Tenth Circuit has approved and supported by reference to one of its prior decisions and a paragraph in Walker on Patents elucidating the doctrine of equivalents.

The specific wording of the decisions setting up the conflict are quoted in the argument in the brief following this petition.

Although a petition for a writ of certiorari will be filed in the Tenth Circuit case on the issue of validity as soon as the clerk of the court can prepare the record for transmission to this Honorable Supreme Court, the holding of invalidity in that case is not *res adjudicata* with respect to the different litigants in the present action. There has been no adjudication of the issue of validity in this case, and petitioner is entitled to have the conflict reviewed on the issue of infringement irrespective of the holding of invalidity in the other action, so that the remaining issues herein may be determined by the courts below.

Should this Honorable Court nevertheless feel that the two cases should be reviewed at the same time, it is respectfully requested that action on this petition for a re-

hearing of the original petition be suspended until receipt of the petition for a writ of certiorari in the Tenth Circuit case of *The Richards and Conover Company v. LeRoy J. Leishman,* Appeal No. 3577.

Jurisdiction.

Matters relating to the subject of jurisdiction were fully set forth in the original petition. As previously mentioned, the time for filing this petition for rehearing under rule 33(2) was extended by Mr. Justice Douglas on December 24, 1948, until fifteen days following the rendering of the new decision of the Court of Appeals for the Tenth Circuit in the *Richards and Conover* case, *supra.* The said decision, affirming the original opinion of that appellate court, was rendered on January 20, 1949.

The Questions Presented.

Inasmuch as the issue of infringement is the only issue that has been adjudicated in the present case, only two questions need be decided to resolve the conflict. These questions are:

1. Is it necessary that the operating member be considered at all when determining infringement of claims 7 and 8, in which no operating member is included as an element?

2. Can infringement of claims 9, 10 and 11 be avoided if the "manually movable operating member" or "manually movable operating means" called for in these claims, is a plunger as in the accused devices instead of a lever as shown in the patent?

Reasons Relied Upon for Allowances of the Writ.

1. The opinion of the Court of Appeals for the Ninth Circuit in the instant case is in conflict with that of the Court of Appeals for the Tenth Circuit in the case of *The Richards and Conover Company v. LeRoy J. Leishman.*

2. The resolution of this controversy is of importance to the radio industry because it involves the push button radio tuners now provided as factory equipment in most automobiles. This type of tuning has largely replaced "manual" tuning, enabling the motorist to tune his radio receiver without taking his eyes from the road. Such tuners are now installed as factory equipment in all current models of American automobiles with the exception of Packard, Studebaker and certain models in the Chrysler line. This same patent was recently the subject of another declaratory judgment suit brought in the Ninth Circuit by General Motors Corporation to have the issues of validity and infringement adjudicated. The final brief before the district court in the General Motors case will be filed within a few days. A decision by this Honorable Court herein will thus benefit the radio industry as well as most of the automobile industry.

Prayer for the Issuance of the Writ.

Wherefore, your petitioner prays that a writ of certiorari issue under the seal of this Court, directed to the Court of Appeals for the Ninth Circuit, commanding said court to certify and send to this court a full and complete transcript of the record of the proceedings of the said court had in the case numbered and entitled Docket No. 11652, LeRoy J. Leishman, appellant, v. Radio Condenser Company and General Instrument Corporation, appellees, to the end that this cause may be reviewed and determined by this Court as provided by the statutes of the United States; and that the judgment herein of said Court of Appeals for the Ninth Circuit be reversed by the court, and for such other relief as to this court may seem proper.

Dated this 2nd day of February, 1949.

LeRoy J. Leishman,
Petitioner, in Propria Persona.

Certificate.

This petition is in my judgment well founded, and is restricted to grounds specified by Rule 33(2), and is not interposed for purposes of delay.

LeRoy J. Leishman,
Petitioner, in Propria Persona.

IN THE

Supreme Court of the United States

October Term, 1948.

No. 372.

LeRoy J. Leishman,

Petitioner,

vs.

Radio Condenser Company and General Instrument Corporation,

Respondents.

Brief in Support of Petition for Rehearing of Order on Petition for Writ of Certiorari.

I.

Publication of Opinions of Lower Courts.

The opinion in the District Court was an unreported memorandum opinion, but the findings of fact may be found in Vol. I of the record, beginning on page 86.

The opinion in the Court of Appeals for the Ninth Circuit [R. Vol. III, p. 285 *et seq.*] is reported in 167 F. 2d 890.

II.

Basis of Jurisdiction.

The judgment was rendered on a motion for summary judgment of the single issue of infringement in an action brought under the Declaratory Judgment Act (Sec. 274-D of the Judicial Code, 28 U. S. C. par. 40 (before the recent revisions)) and patent statutes of the United States.

Jurisdiction of this Court is invoked under Section 240 of the Judicial Code, corresponding to Title 28, U. S. C. A., Paragraph 1254; and also under Rule 38(5b) of the Rules of the Supreme Court. The rehearing of the petition is requested under rule 33(2) of the rules of this Court.

III.

Statement of the Case.

This has already been stated in the foregoing petition under the heading: Brief Statement of Intervening Circumstances, and Summary Statement of the Case as It Now Stands. These statements are hereby adopted and made a part of this brief.

IV.

Specification of Errors.

1. The Court of Appeals for the Ninth Circuit erred in holding that respondent's tuners do not infringe claims 7 to 11 of patent No. Re. 20,827.

2. The Court of Appeals for the Ninth Circuit erred in holding that a plunger is not the equivalent of a lever in the operation of the combinations set forth in the claims here at issue.

3. Inasmuch as original claim 5 included no operating member at all, and since plungers and levers are equivalents anyway, the Court of Appeals for the Ninth Circuit erred in holding that the reissue claims are not for the same invention as the original claims unless they include levers.

V.
ARGUMENT.

Rule 38(5b) of this Honorable Court provides that the court will resolve a conflict between the courts of appeals of different circuits in patent cases. Such a conflict was set up by the action of the Court of Appeals for the Ninth Circuit in affirming and adopting its previous decision in the *Associated* case, and by the action of the Court of Appeals for the Tenth Circuit in disagreeing with the said *Associated* decision and in supporting the U. S. District Court for the Western District of Oklahoma in its findings that the plungers of the accused tuners are equivalents of the levers shown in the patent.

In *Leishman v. Associated Wholesale Electric Co.,* 137 F. 2d 722, 727, the Court of Appeals for the Ninth Circuit said: "* * * the plungers and the levers are not equivalents."

In its decision in the instant case, the Court of Appeals for the Ninth Circuit said [R. Vol. III, p. 263]:

> "Leishman contends that the California court erred in following our decisions in the Associated case. There is no merit in this contention. Our decision has not been reversed or overruled. The California court was not at liberty to overrule it. We could overrule it if we thought it was wrong, but, after reconsidering it, we think it was right and now reaffirm it."

The Court of Appeals for the Tenth Circuit, in speaking of the Ninth Circuit's *Associated* decision said (79 U. S. P. Q. 316 at 319):

> "There, as here, the alleged infringing device employs only one rocker and one set of corresponding

tappets, and the tappets are mounted on and moved by plungers, not levers.

"However, claims 7 to 11, inclusive, embrace a single rocker and corresponding adjustable tappets mounted on pivots, means for moving each tappet so one of its sides engages one arm of the rocker and rotates the rocker until the other side of the tappet engages the other arm of the rocker, and *they do not specifically embrace a lever means for carrying and moving the tappets; and we are unwilling to rest our decision on the narrow ground that the lever in the device of the patent in suit and the plunger in the accused device are not mechanical equivalents.*[3]" (Emphasis added.)

As already mentioned in the statement of the case in the foregoing petition, footnote 3 cited a previous decision of the Court of Appeals for the Tenth Circuit and also referred to a paragraph in Walker. The Tenth Circuit reference was *Steiner Sales Co. v. Schwartz Sales Co.*, 98 F. 2d 999 at 1012, where the court decided the specific point at issue here and concluded that a member that slides horizontally, like a plunger, is the equivalent of one that is pivoted, like a lever.

Section 468 in Walker, Deller's Edition, Vol. 3, p. 1706, to which reference is also made in footnote 3, deals with tests of equivalency, and says:

"Function must be performed in substantially the same way by an alleged equivalent, as by the thing of which it is alleged to be an equivalent, in order to constitute it such. (Citing decisions.) This substantial sameness of way is not necessarily an identity of

merit (citing decisions), nor a theoretical scientific sameness. (Gordon v. Warder, 150 U. S. 47, 52 (1893).) In a purely scientific sense, a screw always performs its function in a substantially different way from a lever, and in substantially the same way as a wedge. Screws and wedges are equally inclined planes, while a lever is an entirely different elementary power. But screws and levers can practically be substituted for each other in a larger number of machines than screws and wedges can be similarly substituted. When a lever and a screw can be interchanged and still perform the same function with a result that is beneficially the same, they are said to perform the same function in substantially the same way. (Turrell v. Spaeth, 3 Bann. & Ard. 458, Fed. Case. No. 14,269 (1878).) Levers and springs are also used interchangeably in the arts (Gould Coupler Co. v. Pratt, 70 Fed. 622, 627 (1895)), and levers of a different class constitute examples of equivalency."

These remarks and citations of the Court of Appeals for the Tenth Circuit thoroughly supported the district court in Oklahoma which made the following findings on the equivalency of the plunger in the accused devices and the lever shown in the patent [R. Vol. I, p. 55]:

"11. The tappet or positioning element described in plaintiff's reissue patent No. 20,827 may be mounted either on a lever or a plunger to move the tappet, since a lever and a plunger perform their functions in the same way and are mechanical equivalents.

"12. The finding 11 is based not only upon the evidence offered on behalf of plaintiff, but also upon the direct testimony of defendant's expert, Dr. Spotts, who testified to the effect that the substitution of plungers for levers is a simple one in the combination covered by claims 7, 8, 9, 10 and 11 of said reissue patent."

These findings were not reversed or disturbed, and consequently are the law in the Tenth Circuit.

The conflict between the Courts of Appeals is thus definite and direct, and the requirements of rule 38(5b) are thus fully met.

Petitioner, having relied upon this rule when he instituted and carried through the proceedings in the Tenth Circuit, is entitled to have the instant decision reviewed by this Honorable Court now that he has succeeded in meeting the requirements of the rule.

If the original denial of the petition was based upon the fact that petitioner won neither of the suits involved in this conflict, such ground for denial should no longer apply, because this Honorable Court in the *Jungersen* cases, *supra,* granted certiorari when both appellate courts had held against the petitioner.

Moreover, the holding of invalidity in the Tenth Circuit case is not in any way binding in the present Ninth Circuit case where the parties are different. If the Court of Appeals for the Ninth Circuit is wrong in its holding that plungers and levers are not equivalents, then a denial of certiorari herein would deprive petitioner of the right to have the issue of validity independently determined between the present parties in the Ninth Circuit. That he

has such a right, is clear from this Honorable Court's decision in *Triplett, et al. v. Lowell, et al.*, 297 U. S. 638, 56 S. Ct. 645 at 648, where the court said:

> "We conclude that neither the rules of the common law applicable to successive litigations concerning the same subject-matter, nor the disclaimer statute, precludes relitigation of the validity of a patent claim previously held invalid in a suit against a different defendant."

If the holding of invalidity in the Tenth Circuit should prevent this Honorable Court from resolving the conflict on infringement between the circuits, then the holding of invalidity in the Tenth Circuit will definitely act to preclude relitigation of that issue between the present parties within the Ninth Circuit.

Conclusion.

It is therefore respectfully submitted that this case is one calling for this Court to resolve the conflicts herein set forth and to exercise its supervisory powers by granting a writ of certiorari and thereafter reviewing and reversing the decision of the court below.

LeRoy J. Leishman,
Petitioner, in Propria Persona.

TOPICAL INDEX

TABLE OF AUTHORITIES CITED

IN THE

Supreme Court of the United States

October Term, 1948

No. 372

LeRoy J. Leishman,

Petitioner,

vs.

Radio Condenser Company and General Instrument Corporation,

Respondents.

Brief for Respondents in Reply to Petition for Rehearing of Order on Petition for Writ of Certiorari.

Since the denial of the original Petition for Writ of Certiorari by petitioner there has been no change whatsoever respecting the instant case. A rehearing was granted by the Court of Appeals for the Tenth Circuit in the case of *The Richards and Conover Company v. LeRoy J. Leishman,* Appeal No. 3577, wherein the original decision has now been reported in — F. 2d —, 79 U. S. P. Q. 316. After such rehearing, the Court of Appeals for the Tenth Circuit reaffirmed its prior decision and on January 20, 1949 filed an opinion on the rehearing, which opinion has not yet been reported but which is set forth in the Appendix hereto. In this opinion, the Court adheres to its position that the asserted claims of the patent in suit do not define invention over the prior art.

Argument.

There are no questions presented in the instant petition which were not raised by petitioner in his original petition. Nevertheless, petitioner again urges that a conflict of opinion exists between the Courts of Appeals for the Ninth and Tenth Circuits, and that since the denial of his original petition this Court has rendered an opinion in the case of *Jungersen v. Ostby and Barton Company et al., Ostby and Barton Company et al. v. Jungersen, Jungersen v. Baden et al.,* — U.S. —, — S.Ct. —, 93 L.Ed. 232, 80 U.S.P.Q. 32, which supports his position that certiorari should be granted in the instant case.

However, the *Jungersen* case did not involve a mere asserted conflict of opinion but rather represented a conflict of decision. In that case, while in both the Second and Third Circuits claims 5 and 6 of the Jungersen patent had been held invalid, the Court of Appeals for the Second Circuit held claims 1 through 4 invalid but the Court of Appeals for the Third Circuit held said claims 1 through 4 valid but not infringed. Thus a square conflict existed between the two Circuits as to the validity of said claims 1 through 4 and as stated by this Court (93 L.Ed. at 234): ". . . the sole issue before us is the validity of the patent."

As pointed out by respondents in their prior brief, no conflict of decision exists in the instant case. In *Leishman v. Associated Wholesale Electric Co.,* 137 F. 2d 722, followed in the instant case, the Court of Appeals for the Ninth Circuit held petitioner's patent not infringed and thereafter stated

> "The judgment declares that the claims 'are invalid for want of invention.' In the view we take, the declaration is unnecessary. As to its correctness or incorrectness, we express no opinion." (page 727)

In *The Richards and Conover Company v. LeRoy J. Leishman, supra,* the Court simply refused to dispose of the case on the ground of infringement, but rather based its decision upon the more important ground that petitioner's patent is invalid.

Thus, despite petitioner's assertions, no conflict of opinion is present herein; but even were such conflict present, in the absence of actual conflict of decision, certiorari will not be granted under the practice of this Court.

Respectfully submitted,

LEONARD S. LYON,
LEONARD S. LYON, JR.,
Attorneys for Respondents.

MAXWELL JAMES,
Of Counsel.

APPENDIX.

IN THE

United States Court of Appeals

FOR THE TENTH CIRCUIT

No. 3577 – November Term, 1948

THE RICHARDS AND CONOVER COMPANY, a corporation,

Appellant,

vs.

LEROY J. LEISHMAN,

Appellee.

Appeal from the United States District Court for the Western District of Oklahoma.

OPINION ON REHEARING.

Filed Jan. 20, 1949. Robert B. Cartwright, Clerk.

Foorman L. Mueller for appellant.

LeRoy J. Leishman pro se. (John Flam on the brief on rehearing.)

Before Phillips, Chief Judge, and Bratton and Huxman, Circuit Judges.

Phillips, Chief Judge, delivered the opinion of the court.

In our former opinion, we recognized the importance of coaxiality between the axis of the rocker shafts and the

axis of the pin on which the tappet is mounted on the lever or plunger. We said:

> "This coaxial relationship is important because it insures accuracy at the time of the adjustment of the tappet. When each side of the tappet is brought into engagement with its corresponding arm of the rocker, the latter having been set at a predetermined and desired position, with coaxiality between the axis of the tappet and the axis of the rocker, pressure on the lever to hold the tappet in engagement with the rocker while the setscrew is being tightened [to hold the tappet in a desired position] will not result in movement of the rocker. Absent such coaxiality, pressure on the lever bringing the tappet into full engagement with the rocker, when the latter is in certain angular positions, would have a tendency to move the rocker."

Such movement of the rocker is called creeping.

We held, however, that the ascertainment of the cause of creeping in the Marschalk device and the making of the changes in that device necessary to overcome creeping would involve the exercise of mere mechanical skill and would not amount to invention.

On rehearing, counsel for Leishman urged that the cause of creeping in Marschalk's device is obscure; and that neither such cause nor the solution of the problem would readily occur to a mechanic skilled in the art.

Our views with respect to such contention may be more readily expressed by reference to the following drawings:

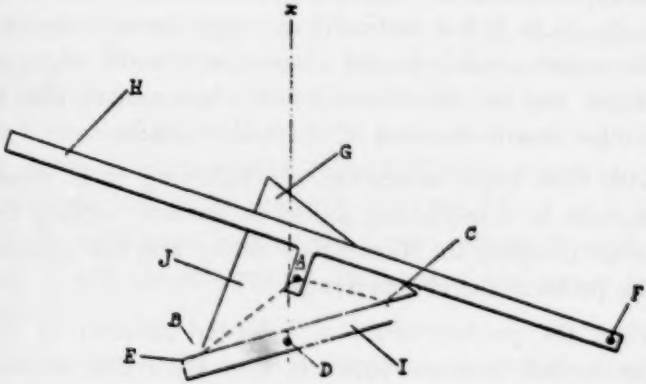

Fig.- 1

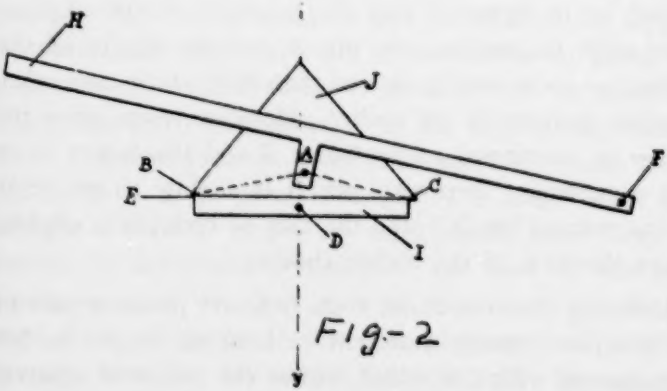

Fig.- 2

I is a view of one end of the rocker; D is the shaft at one end of the rocker, which is carried by a journal in the frame; H is the lever, one end of which is pivotally

attached to the frame at F. An arm extends downward from the lever and the tappet J is pivoted on that arm by a pin A. X to Y is a vertical line drawn through the axis of the rocker shafts; E and C are the opposite edges of the upper face of the rocker, which edges run parallel to each other and to the axis of the rocker shafts.

With little experimentation, the following facts would be obvious to a mechanic, skilled in the art, seeking the cause of creeping in Marschalk's device and the solution of the problem thereby presented.

When the predetermined and desired position of the rocker is such that the upper face of the rocker is substantially at right angles with the vertical line XY, as in figure 2, downward pressure on the lever H sufficient to hold the tappet in full engagement with the rocker will not cause creeping. Indeed, when the rocker is in that position, very heavy downward pressure on the lever will not cause perceptible creeping. When the rocker is positioned, as in figure 2, and the tappet is in full engagement with the rocker, the pin A and the shafts of the rocker are more nearly coaxial than they are in any other possible position of the rocker. However, even when the rocker is positioned as in figure 2 and the tappet is in full engagement therewith, pin A is slightly to the right of the vertical line XY and the axis of such pin is slightly above the axis of the rocker shafts.

Creeping does not result from ordinary pressure exerted on the lever, amply sufficient to hold the tappet in full engagement with the rocker, unless the rocker is substantially tilted, that is, positioned so that one side is substantially above the other as in figure 1.

When the rocker and the tappet are positioned as in figure 1, pin A is a greater distance above the axis of

the rocker shafts and a greater distance to the right of the vertical line XY than when the rocker and tappet are positioned as in figure 2. In other words, the more the rocker is tilted, the greater becomes the non-coaxiality between the axis of the rocker shafts and pin A. And when the rocker and tappet are positioned as in figure 1, the vertex G of the tappet, instead of being approximately at the line XY, as in figure 2, is to the left of such line, and the right-hand base of the tappet extends beyond the edge C and the left end of the base of the tappet is at point B.

When the rocker and the tappet are positioned as in figure 1, the distance from pin A to point B on the upper face of the rocker is greater than the distance from pin A to the point on edge C of the upper face of the rocker where the base of the tappet intersects such edge, referred to hereinafter as point O. And the distance from the axis of the rocker shafts to the point on edge C of the upper face of the rocker where the base of the tappet intersects such edge, referred to hereinafter as point P, is greater than the distance from such axis to point B. Hence, the lever from point P to the axis of the rocker shafts is longer than the lever from point B to such axis, and the lever from point B to pin A is longer than the lever from point O to pin A. As a result, when force is exerted by downward pressure of the lever H through the tappet upon the upper face of the rocker, the downward force at point O has the advantage of greater leverage than the downward force at point B, and the resisting force of the rocker at point B has the advantage of greater leverage than the resisting force of the rocker at point O. Consequently, when the tappet and the rocker are positioned as in figure 1, and lever H is

pressed downward, edge E will move upward and edge C will move downward until the corresponding leverages are approximately equal as in figure 2.

Since the more the rocker is tilted the greater becomes the non-coaxiality between the axis of the rocker shafts and pin A and the greater becomes the tendency of the rocker to creep, and since, when the pin A approaches substantial coaxiality with the rocker shafts, creeping disappears, it is obvious that the problem can be solved by effecting substantial coaxiality between pin A and the axis of the rocker shafts, when the tappet is in full engagement with the rocker. When such coaxiality is effected, the distance between pin A and point O and between pin A and the point where the base of the tappet intersects edge E, will be equal, and the distance between point P and the axis of the rocker shafts, and between such axis and the point where the left-hand base of the tappet intersects edge E, will be equal, when the tappet is brought into full engagement with the rocker, regardless of the position of the rocker.

Such coaxiality can be effected by lengthening the arm on the lever H, extending an arm from the center of the base of the tappet, cutting a rectangular opening in the rocker sufficient to admit the arm on the lever H and the arm of the tappet, positioning the tappet in full engagement with the parallel arms of the rocker and then attaching the arm of the tappet pivotally to the arm of the lever H by pin A, at a point coaxial with the axis of the rocker shafts.

The solution of the problem would be less difficult in a device which employs a plunger to which the tappet is pivotally attached and which moves the tappet into engagement with the rocker because, in such types, there normally would be an opening in the rocker through which one end of the plunger would move and the pin which carries the tappet on the plunger would move in a straight line rather than in an arc as in the lever type.

Counsel for Leishman contend it is manifest that the cause of creeping is obscure because an expert witness for the defendant below testified that if the line of thrust from pin A is either to the left or the right of the axis of the rocker shafts, creeping will occur, and that Leishman's physical exhibits 26, 26A, 26B, and 26C demonstrate that if pin A is not coaxial with the rocker shafts, although the pin travels downward in a line of thrust which intersects the axis of the rocker shafts, creeping will still result.

It is obvious that when the expert so testified, he was talking about a force from pin A traveling along a straight line. In Marschalk's device, pin A travels in an arc. But the fact that pin A moves in an arc to the right of vertical line XY is one cause of the creeping in Marschalk's device. The expert did not testify that it was the sole cause of creeping. Indeed, he testified that where the rocker is mounted on a rotatable shaft, rather than as in the prior patent to Schaefer No. 1906106,[1] substantial

---

[1]Schaefer, instead of using rockers, employed pairs of vertically disposed, reciprocable racks, which moved in guides by means of levers and tappets.

coaxiality between the axis shafts and pin A would be necessary to avoid creeping.

For the reasons indicated, we adhere to the views expressed in our former opinion that the inclusion of the element of coaxiality in claims 8, 10, and 11 of the patent in suit did not rise to the dignity of invention over Marschalk and other prior disclosures.

The Judgment is REVERSED and the cause REMANDED with instructions to enter a decree adjudging the claims in suit invalid for want of invention.

A true copy,

TESTE:

[Seal] ROBERT B. CARTWRIGHT,
Clerk.